Proceedings World Geothermal Congress 2005
Antalya, Turkey, 24-29 April 2005

Status and Prospects of Development of Russian Geothermal Heat Supply Systems

Vitaly Anatolyevich Butuzov

South-Russian Power Company, Krasnodar City, Russia

zaoyurek@aport2000.ru

Keywords: residential and public buildings, Krasnodar

ABSTRACT

Resources of geothermal fields suggest good perspectives of heat supply system development. The total summary capacity of the existing heat supply geothermal systems in Russia amounted to 430 MW, while that of the perspective systems amounts up to 21 thousand MW. In some regions, their utilization may ensure up to 10% of total power consumption. At present, water intake systems are operated, mainly, in three regions: Daghestan (North Caucasus), Krasnodar Region (North Caucasus), Kamchatka peninsular (Kamchatka).

NARRATIVE

In Daghestan, at present, over 4.1 million m^3 of geothermal water is used for heat supply per year. Maximum output of water was gained in 1988 – 9.4 million m^3. In this Republic, 123 wells have been drilled, 45 wells are functioning. The Kizlyar Field is the largest deposit whose annual output of 9 wells amounted to 1.4 million m^3 of geothermal water. Only in this field, reinjection of used geothermal heat fluid in two wells in the volume 0.8 million m^3 per year is carried out, which is 57% of the total volume of water output. The heat supply systems are double-circuit systems. The first circuit has a heating fluid such as Chokrak horizon water with a temperature of 115^0C, and the second circuit has Apsheron horizon water with the temperature of 48^0C. With the population of the town of Kizlyar as many as 45 thousand people, 70% of inhabitants, are consumers of geothermal heating and hot water supply. A project has been developed for increase of installed capacity of this geothermal system with reinjection of used fluid as calculated to 100% procurement of resources for the needs of the town. The value of this project implementation is 1 million US dollars. Payback period is 7 years.

Nowadays, in Krasnodar Region, annual output and consumption of geothermal water for heat supply needs is 2.3 million m^3 per year. Maximum output of geothermal water in 1986 was 8.6 million m^3. Grand total, in this region, 79 wells have been drilled, out of which only 40 are operated. The installed thermal capacity of 16 thermal water intake systems amounts to 238 MW, annual output of thermal power is 834 thousand MWh. Township Mostovskoye's Field is the largest field with confirmed capacity of 11 thousand m^3/day, here 13 wells are functioning. This field is characterized by low salinity – to 1 g/l at the temperature of 75 ^{0}C.

Figure 1 shows a single-circuit diagram of the geothermal heat supply system of the estimated capacity as much as 5 MW in township Mostovskoy of the Krasnodar Region. The fluid parameters are specified as: consumption m^3/h, temperature – ^{0}C, pressure – kgf/cm^2. Geothermal water from two wells with output 45-70 m^3/hour and temperature 75 ^{0}C each after the chemical decontaminating process is directed into two accumulation tanks of 300 m^3 capacity. Utilization of waste thermal water is carried out with two steam-compression pumps of 500 KWt designed thermal capacity. The fluid, after the heating system stage before the heat pumps, is divided into two streams one of which is cooled down to 10^0C and drained into a water reservoir, the other is heated up to the temperature of 50^0C and returned back to accumulation tanks.

The system of geothermal heat supply for the population of 70 thousand people in the town of Labinsk in Krasnodar Region is related to a number of large-scale projects. The geothermal field has been developed with four wells of the output 2500-5000 m^3/day and of the temperature of 110-120^0C, salinity of 14 g/l, and the contents of phenols being up to 0.4 mg/l. Predicted operational resources of the field have been estimated as much as 20 thousand m^3/day or 100 MW. Designed heat demands of the town facilities are satisfied with the use of 21 municipal and 25 industrial boiler houses. Most of the boiler houses are equipped with ineffective cast-iron boilers and require modernization.

Kamchatka is one of the eastern regions of Russia; here, heat supply is based on burning of imported boiler oil (USA) and coal (Sakhalin). At the same time, here, there are the richest geothermal deposits, the thermal capacity of which is estimated as much as 5 thousand MW. At present, actually, nearly 1% of that thermal capacity is used for heat supply.

Development of Verhne-Paratunsky thermal deposit is most perspective, the temperature being 85 ^{0}C and operational functionality up to 23.3 thousand m^3/day. The project team managed by Professor O. A. Povarov has developed a geothermal heat supply system in the town of Elizovo (suburb of Petropavlovsk-Kamchatsky) with a designed thermal capacity of 150 MW. After geothermal water transportation with water consumption of 300 l/sec from Verhne-Paratunsky thermal deposit along the heat pipeline 30 km long to the town Elizovo water temperature goes down to 75 ^{0}C. In order to use the heat potential of thermal fluid to the full extent, installation of thermal-compressors is envisaged at a total designed thermal capacity up to 85 MW. After cooling down to 10-20^0C geothermal water is drained to a water reservoir. The designed temperature chart of the heat supply system is 95-60 ^{0}C. The thermal compressor installed electric power is 31 MW, the driving of which it is recommended to consume electric power from Mutnovsky geothermal power station of 100 MW capacity, under the second phase of construction. Implementation of this project will enable to stop operation of 25 boiler houses using boiler oil and coal. The value of this project implementation is 50 million US dollars. Payback period is 5 years.

The geothermal heat supply systems considerably differ from traditional systems. They incorporate production and reinjection wells, compressor stations and thermal stations (TS). These TS have specific thermal and hydraulic

specifications. Additional demands are lodged to their equipment, flow-sheets and modes of operation.

In Russia, designing of geothermal heat supply systems is carried on in conformity with the Standard Norms /1/. They contain the following basic sections: heat engineering and economic principles of utilization, diagrams and equipment, thermal design of heating and cooling systems, heating adjustment. The following is the main principle of perfection of heat supply geothermal system such as minimal consumption of geothermal water and maximum value of the efficiency factor to be defined according to formula:

$$H_{geoth.}=iZ\xi(1-d_н)$$

where η_{geoth} – efficiency factor ; i – measure of temperature difference relative response; Z – measure of load maximum relative application; ξ – measure of designed flow rate relative increase of thermal water intake system; $d_н$ – a quotient of the maximum-demand heating up in the annual heat balance of the geothermal heating system.

Economic principles, regulated according to the Standard Norms /1/ require revision under the Market Economy conditions. Sections according to the flow-charts, equipment, heating and heating adjustment systems are based on an obsolete approach to a problem and engineering solution. Terms and definitions are not in conformity with the generally acknowledged International terminology.

Beside the above-mentioned Standard Norms, there are B. A. Lokshin books /2/, A. G. Gadzhiyev et al. books /3/ relating to the analysis of the experience in designing and operation of geothermal heat supply systems.

CONCLUSIONS

With regard to the above-mentioned information, the following conclusions may be made:

1. Russia has considerable resources for development of a geothermal heat supply system as well as a definite experience in their construction and operation.

2. For a vast-scale development of the geothermal heat supply system it is necessary to apply the achievements of world practice and, primarily, reinjection process application for water intake systems and thermal compressors application for heat carrier deep cooling.

3. It is expedient to revise the Russian Standards of geothermal heat supply system design with regard to technical decisions and equipment approved in World practice.

REFERENCES

1. Designing Norms. Section «Solar hot water supply units»: VSN 52-86 / Gosgrajdanstroi USSR. – M., 1987. – 17 p.
2. Lokshin B. A. Geothermal water application for heat supply process. – M.: Stroyizdat, 1974. – 148 p.

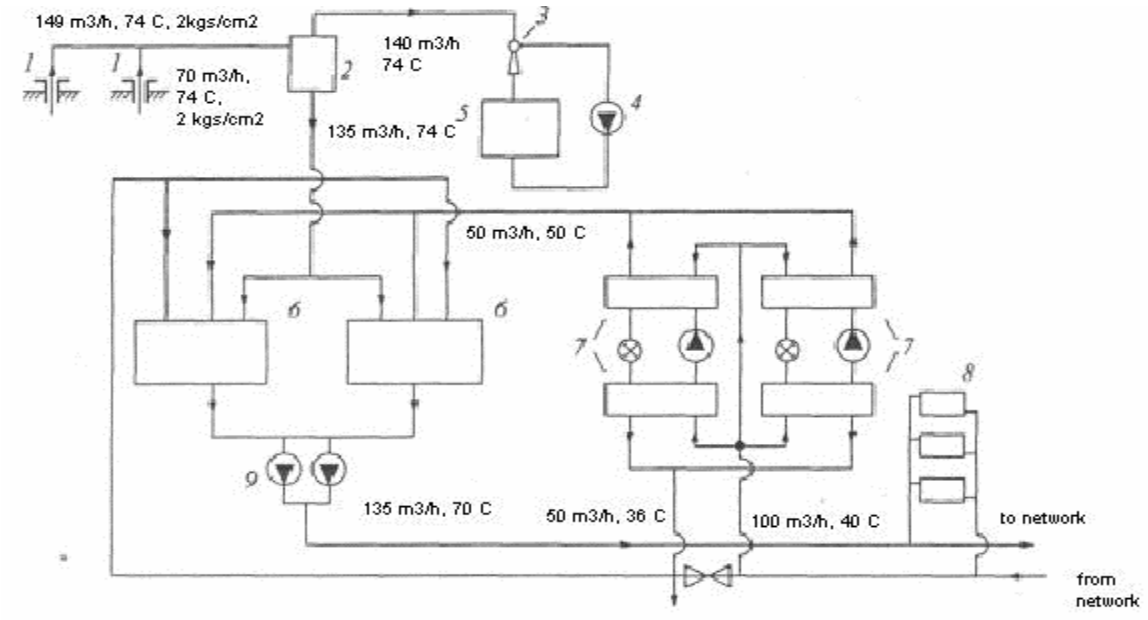

FIGURE 1 **– LAYOUT OF GEOTHERMAL HEAT SUPPLY SYSTEM IN SETTLEMENT MOSTOVSKOY**

1-Geothermal well ,2–Degasifier, 3-Ejector pump, 4 -Operating water pump, 5-Operating water tank, 6-Water storage tank, 7-Heat pump, 8-Heating system, 9-Network pump

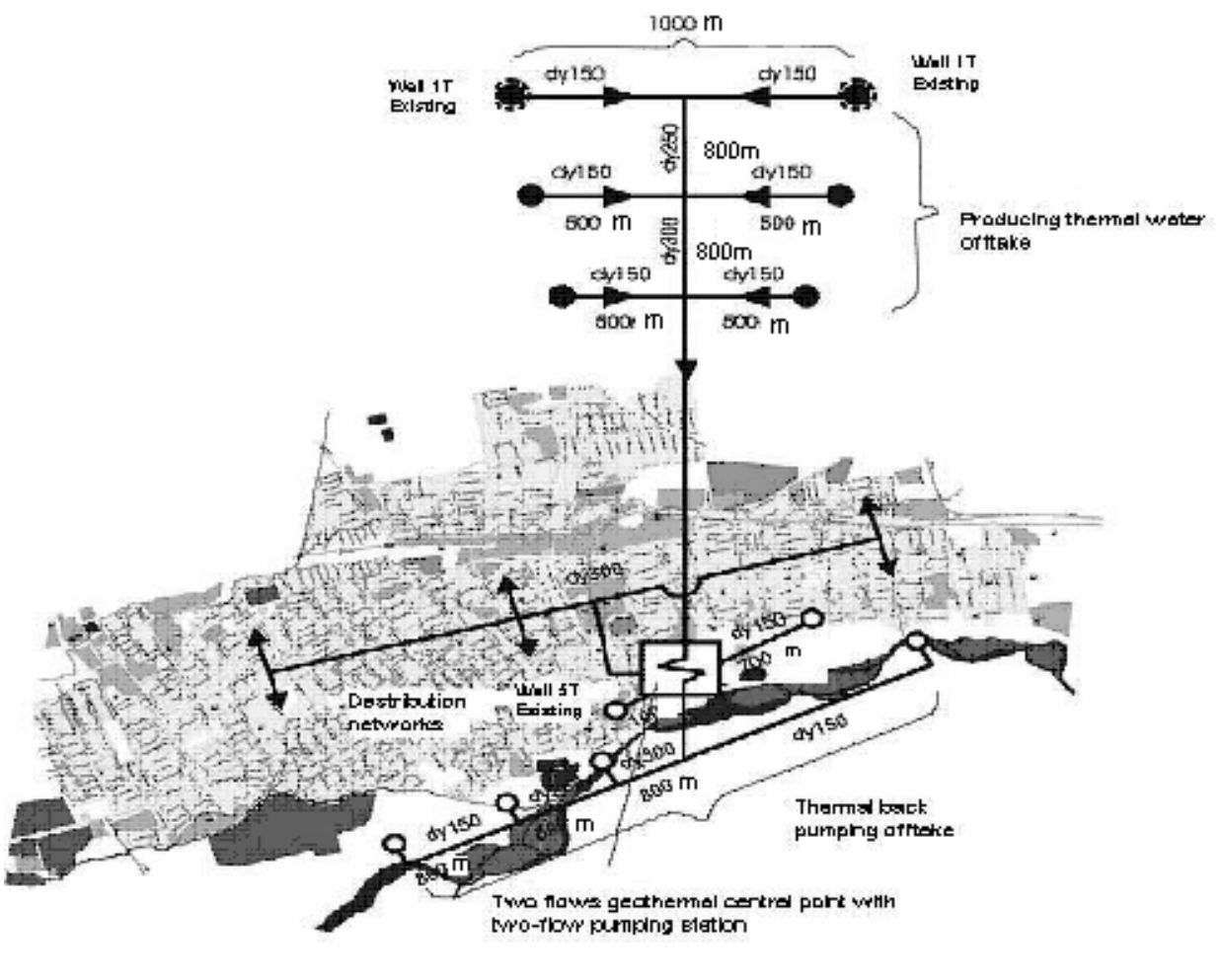

FIGURE 2 – **LAYOUT OF 60 MW DESIGN CAPACITY GEOTHERMAL HEAT SUPPLY OF CITY LABINSK**