DEVELOPMENT OF HIGHLY INSULATED INNER PIPE FOR DOWNHOLE COAXIAL HEAT EXCHANGER

MORITA, K., Nat. Res. Inst. for Pollution and Resources, Onogawa 16-3, Tsukuba 305, Japan
MORIMOTO, M., VSI Dept., KUBOTA, LTD., Ohama 2-26, Amagasaki 660, Japan
MUKAI, R., VSI Dept., KUBOTA, LTD., Nihonbashi-Muromachi 3-1-3, Chuo-ku, Tokyo 103, Japan

1. INTRODUCTION

A variety of technologies have been developed on the heat extraction or power generation. However, few technologies have been actively developed for exploitation of the super hot formations or the low productive geothermal reservoirs which produce insufficient amount of hot water or steam for power generation or direct use.

The downhole coaxial heat exchanger is composed of a well drilled into the hot formations and an inner pipe (See Fig. 1). Heat is extracted using water or low boiling point heat extraction medium. The downhole coaxial heat exchanger system is always applicable when the formation temperature is high enough and is best suited for development of geothermal energy resources as stated above.

The authors have noted the possibility of this method and been studying effects of various design parameters on the performance of heat exchanger by means of computer simulation. As a result, it was found that the amount of extracted heat was greatly increased by combining highly insulated inner pipe with the reverse circulation (Morita et al., 1985; Morita et al., 1986). The thermal output of this method is ten times or much higher than previous methods, e.g. using steel pipe as the inner pipe, for the same geotogical conditions.

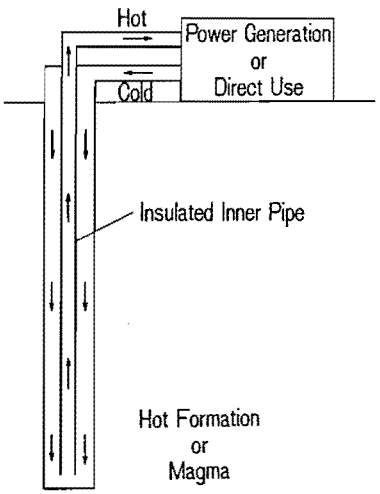

Fig. 1 Concept of downhole coaxial heat exchanger

It is also pointed out by recent theoretical and experimental researches that the heat extraction rate is highly increased when the convective heat transfer exists in the formation as compared with cases where the heat is transferred by the conduction only (Kimura et al., 1986). The effect of convection in the formations on the thermal output is the most directly and accurately evaluated by field experiments of heat extraction. However, high performance small diameter insulated inner pipes that can be applied to the field experiment has not yet been developed.

Accordingly, the authors has initiated design and manufacturing of prototype models of small diameter highly insulated inner pipes for the field heat extraction experiments.

The rest of this paper describes manufacturing of insulated inner pipe and the evaluation of its heat insulating performance.

2. OPERATING CONDITIONS AND PERFORMANCE REQUIREMENTS OF INSULATED INNER PIPE

Operating conditions and performance requirements are as follows:

1) Diameter of the inner pipe
Many wells for prospecting geothermal resources have been drilled in Japan. Most of these wells are completed to about 80 mm inner diameter. As our field experiments will be practically conducted using these wells, we have decided to manufacture inner pipes that can be operated in the wells of which inner diameter is 80 mm.

2) The Maximum hanging depth (depth of well)
To increase thermal outputs, the well must be desirably as deep as possible. The maximum hanging depth was set to 500 m or larger considering the small diameter of inner pipe.

3) Temperature
Considering data obtained in geothermal fields, the maximum temperature at 500 m to 1000 m in depth is expected to be about 300°C. Accordingly, we have decided to manufacture insulated inner pipes that can be operated in the hot formations at 300°C. The maximum temperature difference between inside and outside of the pipe is estimated to be about 250°C.

4) Heat extraction medium and its property
Water is assumed as a heat extraction medium. A downhole coaxial heat exchanger system may be open system or closed system. The present inner pipes were designed so that it can be

used in a closed system. Therefore, the heat extraction medium is nearly neutral without containing corrosive substance other than the oxygen.

5) Connection
Since screw couplings of API specification are used for connecting drill pipes at the fields, the same type of couplings are employed for connection of the insulated inner pipes.

6) Requirements for thermal insulation performance
Since the performance of coaxial heat exchanger system is largely affected by the thermal insulating performance of inner pipe, the equivalent thermal conductivity of inner pipe should be as low as possible. With consideration of results of analysis up to date (Morita et al., 1985; Morita et al., 1986) and the fact that the diameter of pipe is small, the overall equivalent thermal conductivity of inner pipe was set to 0.3 W/(m·K).

3. MANUFACTURING OF INSULATED INNER PIPE

3.1 Selection of heat insulation method

The vacuum double pipe system was employed for thermal insulation as it will provide with the best heat insulating performance. There are two alternatives of the vacuum double pipe insulation system: The high vacuum insulation type and the evacuated powder insulation type (Yamasaki et al., 1988). Whereas the high strength steel are used for inner and outer pipes of the high vacuum type to withstand the pressure difference between outside and inside of the pipe, the powder is packed between outer and inner pipes to support the pressure difference of the evacuated powder insulation type. The evacuated powder insulation type was employed as an insulation system. The advantages of packing with the powder are as follows:

1) Only outer pipe shall have enough strength as the pressure difference between outside and inside of the powder packed pipe is supported by the powder.
2) High thermal insulation is accomplished by the powder packed pipes even at relatively low vacuum.

A disadvantage of this type is relatively low heat insulation performance as compared with high vacuum insulation type due to the heat conduction by the powder.

3.2 Structure and dimensions

Two types of prototype models were manufactured. One is composed of the outer pipe of carbon steel equivalent to API H-40 and the inner pipe of stainless steel equivalent to SUS304 (referred to as Model 1, hereinafter). Another is consisted of the outer pipe of carbon steel equivalent to API H-40 and the inner pipe of carbon steel equivalent to STPG38 (referred to as Model 2, hereinafter).

As the thermal conductivity of the stainless steel is lower than the carbon steel, higher thermal insulation is anticipated for Model 1, in addition to that higher corrosion resistance is expected. Since stress corrosion cracking is likely to occur with the stainless steel, model 2 was also manufactured.

Fig. 2 shows the structure of insulated inner pipe. Fig. 3 shows the profiles and dimensions of Models 1 and 2.

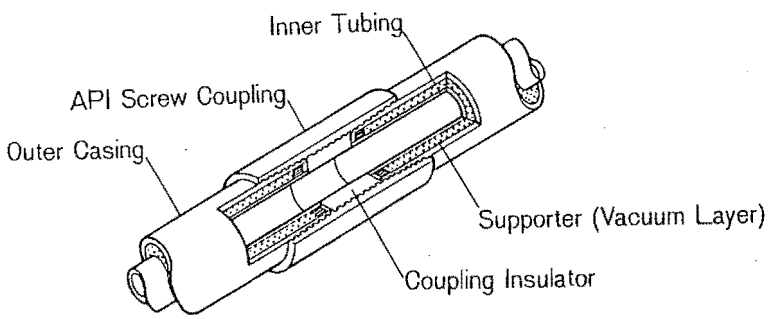

Fig. 2 Structure of insulated inner pipe

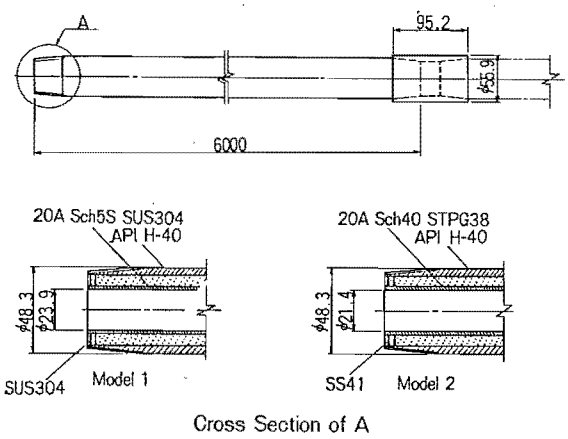

Fig. 3 Profile and dimension of insulated inner pipe

Table 1 Estimated strength of the small diameter insulated inner pipes

	Model 1	Model 2
Maximum hanging depth(m) (at 300℃, S.F.=1.6)	750	670
Collapsing pressure(kgf/cm²) (at 300℃, 5.4ton load)	198	
Maximum allowable internal pressure(kgf/cm²) (at 300℃)	138	299

Table 1 summarizes the calculated strength of insulated inner pipes manufactured by the authors. It is found from the table that both models 1 and 2 are applicable under the assumed conditions in the aspect of strength.

4. EVALUATION OF THERMAL INSULATION PERFORMANCE

4.1 Principle of measurement

The thermal insulation performance was evaluated in accordance with the cylindrical direct method specified in JIS A9512.

When the end effect of specimen is negligible, the thermal conductivity of the specimen is given by:

$$\lambda = \frac{Q \cdot \ell n \frac{r_2}{r_1}}{2\pi \cdot (T_1 - T_2) \cdot L} \quad (W/m \cdot K)$$

where, Q : Power input (W)
L : Length of specimen (m)
r_1: Inner diameter of specimen (m)
r_2: Outer diameter of specimen (m)
T_1: Temperature of inner surface of specimen (°C)
T_2: Temperature of outer surface of specimen (°C)

4.2 Measuring method and apparatus

Figure 4 shows the general view of the measuring apparatus. The insulated inner pipe to be evaluated is submerged in an insulated water tank. The water whose temperature is adjusted in a thermostat was circulated in the tank to maintain the temperature of outer surface of insulated inner pipe at constant. The temperature and flow rate of the circulating water are 15°C and 9-10 ℓ/min. Inside of the inner pipe was heated by heaters to which the power was supplied at a constant level. To minimize the influence of axial flow of heat, caps having similar thermal insulation capacity with the inner pipe were attached to both ends of the inner pipe. Leads of thermocouples for determination of internal temperature are taken out at the 8T current terminal attached to the pipe to be evaluated.

5. RESULTS AND DISCUSSIONS

Figure 5 shows the results from measurements of thermal conductivity of insulated layer (the vacuum layer excluding the inner and outer pipes). It was found from the figure that the values of thermal conductivity of an insulated layer is about 0.005 W/(m·K) to 0.008 W/(m·K) which shows extremely high insulation performance.