Proceedings European Geothermal Congress 2007
Unterhaching, Germany, 30 May-1 June 2007

Desirable Thermophysical Properties of Working Fluids in Organic Rankine Cycle

Aleksandra Borsukiewicz-Gozdur and Wladyslaw Nowak

Szczecin University of Technology, al. Piastów 19, 70-310 Szczecin, Poland

aborsukiewicz@ps.pl>

Keywords: ORC, low-temperature Rankine cycle, organic working fluid

ABSTRACT >

In the paper presented are the results of calculation of operation effectiveness of low temperature Clausius-Rankine cycle supplied with geothermal energy with temperature ranging up to 120°C. A concise literature survey has been presented with respect to required features of the working fluid used in a clockwise cycles as well as comparisons have been made with required features of the fluid in refrigeration cycles. Presented also has been thermodynamical analysis of low temperature Clausius-Rankine (C-R) cycle. Efficiency and power have been considered as evaluation criteria. Presented have been common features as well as major differences in requirements facing fluids with favourable properties when applied in clockwise cycles as well as compared have been with positive features of working fluids used in refrigeration cycles.

1. INTRODUCTION

A first, widespread interest in organic Rankine cycle was fund in sixties of the past century but it was the first energy crisis which rendered an intense search for new energy technologies, and ORC technology amongst it Ray and Moss (1966), Barber (1974), Garay (1975). It ought to be mentioned that in the considered period the price of crude oil increased from 2 to 32 dollars per barrel. Despite 600 fold increase of crude oil price the technology of that type has still to attract popularity due to a low efficiency with respect to investment costs. At present the ORC technology finds more practical applications not only due to terminating resources of fossil fuels but also a low emission of harmful gases to atmosphere. The clockwise cycle featuring a substance with low boiling point temperature is primarily used in cases when temperature of the upper source is too low to apply water as a working fluid. The effectiveness of ORC depends primarily on temperatures of upper and lower heat sources, however, in cases when these two quantities are fixed by temperatures of geothermal resources in a given region as well as ambient temperature then the important issue is adequate selection of working fluid. Such selection has an important influence on efficiency and power of installation, but also on the extent (and related cost) of particular devices.

Theoretically every fluid could be used as a working fluids in a clockwise or counter clockwise cycles in the required temperature range. In practice however there are several specific features which such fluid should or should not have in order to be successfully implemented as a working fluid in a given kind of cycle. Analysis of available literature enables to conclude that there are limited number of survey works encompassing comparative analysis of possibility of application of different working fluids. One of the more extensive analysis on the influence of working fluid properties in the ORC cycle can be found in Badr et al. (1985). The authors present a list of 13 thermodynamical and physical criteria which should be obeyed by a relevant fluid used in ORC in temperature range 40-120°C. Authors attention was also focused on works Hudson (2005), Boyarski et al. (2003), Hung (2001), Angelino and Colonna di Paliano (2000) and Drescher and Bruggemann (2007). however the latter two relate to application of ORC at temperatures of upper heat source above 275°C. An important issue regarding the possibility of application of organic fluids is their chemical stability, which is discussed in detail by Andersen and Bruno (2005).

2. THERMODYNAMICAL ANALYSIS OF LOW - TEMPERATURE CLAUSIUS RANKINE CYCLE

The term effectiveness of utilization of waste energy or geothermal energy is understood as a possibility of its conversion into another kind of energy produced in a specific technological process. During the process of conversion of the mentioned above energy into electricity in a power plant operating in line with the Clausius-Rankine cycle the extent of power of such cycle is the most important quantity. Its value is dependent on the amount of supplied rate of geothermal energy and its temperature as well as influences the mass flow rate of heat carrier and its temperature. The higher the mass flow rate of heat carrier and the higher its temperature over the surrounding temperature the effectiveness of energy conversion is higher.

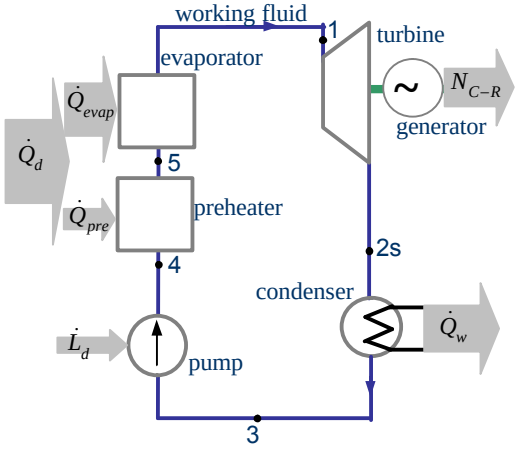

Figure 1: Schematic of low temperature C-R cycle installation

In the case of Clausius-Rankine cycle operating using the low boiling point fluid, the schematic of which together with a cycle of thermodynamical processes have been presented in Fig. 1 and 2, the extent N_{C-R} power in

function of supplied heat $\dot{Q}_d$ and physical properties of working fluid can be determined from a relation:

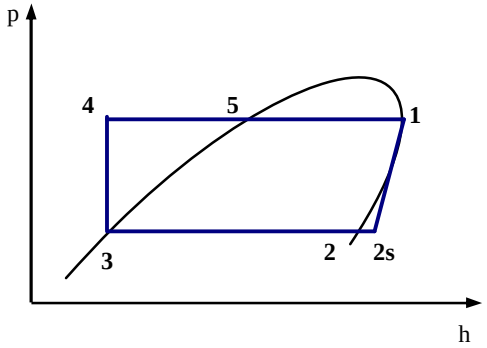

Figure 2: A cycle of thermodynamical processes in low temperature C-R cycle.

$$N_{C-R} = h_{C-R} \cdot \dot{Q}_d = h_{C-R} \cdot \dot{m} \cdot (h_1 - h_4) \quad (1)$$

where:

$\dot{m}$ [kg/s] - mass flow rate of working fluid

h_{C-R} [-] - efficiency of C-R cycle, which can be determined from the following relations

$$h_{C-R} = \frac{l_{C-R}}{q_d} = \frac{h_1 - h_{2s}}{h_1 - h_4} \quad (2)$$

and

$$\dot{Q}_d = \dot{m}(h_1 - h_4) \quad (3)$$

rate of supplied heat to C-R cycle can be determined from a balance of evaporator in the case of application of a so called dry working fluid:

$$\dot{Q}_{evap} = \dot{m} \cdot h_{fg} \quad (4)$$

where:

h_{fg} [kJ/kg] – heat of evaporation

from which it results that the mass flow rate of low boiling point fluid in the cycle is determined by a relation

$$\dot{m} = \frac{\dot{Q}_{evap}}{h_{fg}} \quad (5)$$

or

$$\dot{m} = \frac{\dot{Q}_{evap}}{(Mh_{fg})} M \quad (6)$$

Substituting relation (6) to the expression (1) we obtain a relation:

$$N_{C-R} = h_{C-R} \cdot \frac{\dot{Q}_{evap}}{(Mh_{fg})} \cdot M \cdot (h_1 - h_4) \quad (7)$$

whereas from that relation stems unanimously

$$N_{C-R} = l_{C-R} \cdot \frac{\dot{Q}_{evap}}{(Mh_{fg})} \cdot M \quad (8)$$

As results from relation (8) value of power N_{C-R} depends primarily on physical and chemical properties of working fluid and assumes greater values for greater value of specific work l_{C-R} (Table 1) and molar mass M (table 1) and smaller values for smaller latent heat of evaporation Mh_{fg} (Fig. 6) at the same value of $\dot{Q}_{evap}$.

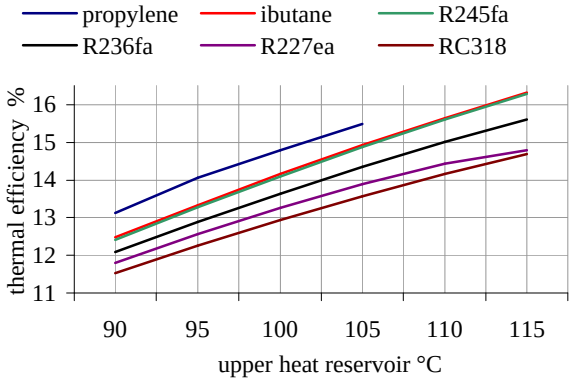

Figure 3: Efficiency of C-R cycle in function of temperature of the upper heat source.

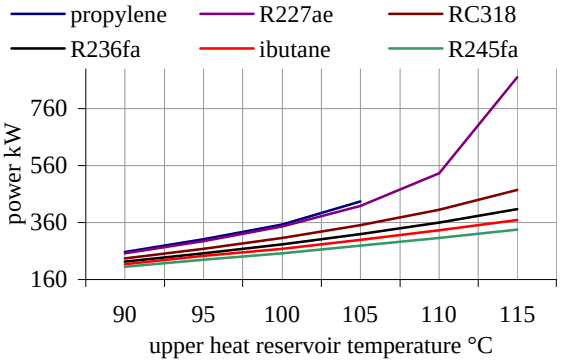

Figure 4: Theoretical power of C-R cycle in function of temperature of the upper heat source (flow rate of geothermal water 100m^3/h).

It stems from the analysis of plots in Fig. 3 and 4 that considering of only efficiencies of C-R cycle with working fluids featuring different thermodynamical properties does not provide unanimous answer to a question which fluid is most appropriate despite its operational properties. Efficiencies for specific fluids usually do not differ more than by 2% for specified temperatures but the theoretical power of the cycle can be even twofold greater for extreme cases of fluids (at the same values of temperatures of upper and lower heat source). The highest values of theoretical power have been obtained for propylene and R227ea. The highest values of efficiency and power of the cycle have been obtained for the case of propylene and R227ea

whereas the highest value of a flow rate of working fluid in the cycle (Fig. 5) has been attained for a fluid. Highest values of efficiency and power of the cycle have been obtained for propylene and R227ea whereas the highest value of flow rate of working fluid in the cycle (see Fig. 5) has been obtained in the case of R227ea and RC318. The amount of propylene in the cycle at a flow rate of 100 m3/h of waste water with temperature of 95°C is over three fold smaller than in the case of R227ea. On the other hand the specific work (Table 1) obtained in the C-R cycle is approximately three times smaller in the case of R227ea then in the case of propylene and therefore as a consequence these fluids return very similar values of the cycle theoretical power. In Table 1 presented also are values of molar masses. In literature Angelino and Colonna di Paliano (2000) there is known an inversely proportional relation between the molar mass and specific work, i.e. in usually heavier substances give smaller values of specific work of the cycle.

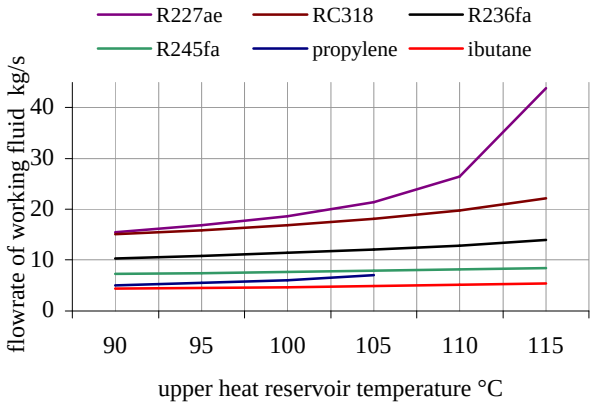

Figure 5: Flow rate of working fluid in function of temperature of heat carrier (the flow rate of water carrying the waste/geothermal heat is 100m^3/h).

Table 1: Tabulation of values of molar mass, critical temperatures, efficiencies and specific work for the C-R cycle in the case of evaporation temperature equal 95°C and condensation temperature of the fluid - 25°.

working fluid	M kg/kmol	Tcr °C	h_{C-R} %	l_{C-R} kJ/kg
RC318	200.03	115.2	12.26	16.90
R227ea	170.00	102.8	12.56	17.47
R236fa	152.04	124.9	12.90	23.18
R245fa	134.05	154.0	13.28	30.67
ibutane	58.12	134.7	13.32	53.89
propylene	48.08	92.4	14.05	54.75

In Table 1 tabulated have been values of critical temperatures of fluids selected for analysis. It stems directly from the analysis of these data as well as from the knowledge of phase diagrams of fluids that the latent heat of evaporation at a given temperature depends on the distance to critical point. The closer the critical point the smaller the evaporation heat until the latter reaches value of zero at the critical point. In Fig. 6 presented is a relation of molar evaporation heat for selected fluids in function of temperature. Analysing that diagram there can be noticed a direct relation between evaporation heat and cycle power. The fluids featuring small values of latent heat of evaporation permit to obtain higher values of power. The diagrams of such type can be used in designing ORC installations with the view of selection of working fluid. For the selected temperature of the upper heat source, from the thermodynamical point of view, there ought to be selected fluids which have a curve representing the function h_{fg}=f(t) close as possible to x axis.

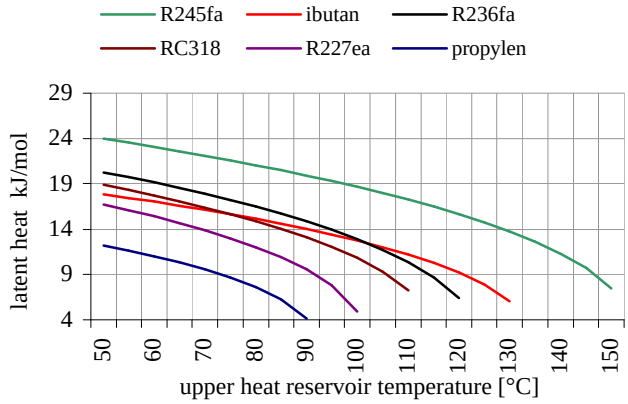

Figure 6: Molar heat of evaporation of selected working fluids in function of evaporation temperature.

3. COMPARISON OF WORKING FLUIDS PROPERTIES IN RELATION TO THEIR APPLICATION TO CLOCKWISE AND COUNTER CLOCKWISE CYCLES

Many features of fluids are common in the case of their application in clockwise and counter clockwise cycles. On the basis of literature data tabulated have been values which have an influence of the effectiveness of operation of refrigeration systems and the organic Rankine cycle. The features of the fluids which are basic and often obvious have been collected in Table 2, in some cases with a short comment.

Table 2: Properties of working fluids common for refrigeration and Clausius-Rankine cycle.

Operational properties
Substance should be cheap, accessible and easy to transport
Physiological properties
Non-toxic, desired to have a smell
Physical properties
Temperature of triple point should be adequately smaller than expected minimum temperature in the cycle whereas

the critical point temperature should be adequately higher than the highest temperature of the fluid in the cycle (assuming that the considered cycle is sub-critical)
The fluid should feature chemical stability in a full range of operational temperatures
It is desired that the fluid is non-explosive, inflammable, featuring a value of zero ODP and low value of GWP, whereas installation operating with that fluid should feature the lowest value of LCCP (Lifetime Cycle Climate Performance) of TEWI (i.e. device working with that fluid should feature a high energy efficiency)
The fluid should be compatible with common system materials and non-corrosive
The fluid should have a high value of heat transfer coefficient
Viscosity should be small not to render additional pressure losses in the system
Number of atoms in the particle should be rather large and hence that quantity has an influence on the shape of saturation curves (the derivative $\frac{ds}{dT}$ should approximately be equal zero). In the case of a larger number of atoms in the particle the derivative $\frac{ds}{dT}$ is greater than zero, which means that the process of isentropic expansion starting on the saturation line will continue in the region of superheated steam in the case of clockwise cycles. In the case of counter clockwise cycles a steep saturated liquid curve means that there are reduced losses in the expansion valves.
At a lowest required evaporation temperature (refrigeration cycles) as well as in condenser (Clausius-Rankine cycle) there ought to be over pressure in order to prevent eventual leaks of air and moisture from outsider into the installation.
Specific volume of saturated steam and liquid in the liquid state should be small which is related to smaller sizes of compressors in refrigeration cycles and smaller sizes of pump and turbine in last stages of the C-R cycle.

Principal differences between physical properties of fluids with respect to their application have been presented in Table 3.

Table 3: Required properties of fluids in relation to the kind of applied cycle.

COUNTER CLOCKWISE CYCLE	CLOCKWISE CYCLE
Small molar mass	Molar mass is rather large and due to that fact the work of decompression in turbine is inversely proportional to molar mass which renders that turbines driven by heavy substances feature small circumferential velocities and can have small number of stages.
Small specific work of compression (small energy consumption)	Large specific work of decompression is beneficial from the point of view of cycle efficiency whereas small specific work of the cycle is advantageous from the point of view of turbine designs.
Large latent heat of evaporation required	The latent heat of evaporation should be as small as possible

4. CONCLUSIONS

Despite the fact that finding of such fluids which would obey all demands of the ideal substance (some of them are contradictory) it ought to be stressed that the requirements facing the working fluids, apart from several common features from the thermodynamical point of view are principally different.

It can be concluded from the presented analysis that the fluid critical temperature has an important influence on the effectiveness of operation of ORC cycle and the cycle power in particular. Prove of the fact, that a small value of the latent heat of evaporation is the most desirable feature leads to a conclusion that the latent heat of evaporation reduces when we approach the critical point. It ought to be stressed that the fluid ought the evaporate closely to the critical point. Such conclusion is of particular importance in cases of low-temperature utilization of geothermal heat.

An important issue is how closely can we, from a practical point of view, approach the critical point. Due to the fact that refrigeration fluids, as indicated by the name, are mostly used in counter-clockwise cycles where the maximum temperature rarely exceeds 50°C there is a perceivable lack of extensive results of experimental investigations on the behaviour of the fluid under near-critical conditions.

REFERENCES

Andersen W.C. and Bruno T.J.: Rapid screening of fluids for Chemical stability in organic Rankine cycle applications, *Ind.Eng.Res*., **44**, (2005), 5560-5566.

Angelino, G., and Colonna, di Paliano, P.: Organic Rankine Cycles (ORCs) for energy recovery from Molten Carbonate Fuel Cells, *Proceedings* 35th Intersociety Energy Conversion Engineergin, Nevada USA, (2000).

Badr, O., and Probert, S.D., and O'Callaghan, W.P.: Selecting a working fluid for a Rankine-cycle engine, *Applied Energy*, **21**, (1985), 1-41.

Barber, R.E.:. Rankine-Cycle Systems for Waste Heat Recovery, *Chemical Engineering*, November 25, (1974).

Boyarski, M. Yu., and Nikolski, A.I., and Sapozhnikov, M.B., and Shipkov, A.A.: Comparative performance of working fluids in low-temperature vapor-turbine cycle, CD *Proceedings* International Geothermal Workshop, Sochi, Russia, (2003).

Drescher, U., and Bruggemann, D.: Fliud selection for the Organic Rankine Cycle (ORC) in biomass power and heat plants, *Applied Thermal Engineering*, **27**, (2007), 223-228.

Garay, P. N.: Application of chemical fluids in Rankine-cycle plant, *Procedings* IECEC, 1435-1438, (1975).

Hudson, R.B.:Electricity Generation. In: Dickson, M. H., Fanelli, M. (Eds.), *Geothermal energy: utilization and technology*. Earthscan with UNESCO, 29-49, (2005).

Hung, T.C.:Waste heat recovery of organic Rankine cycle using dry fluids. *Energy Conversion and Management*, **42**, (2001), 539-53.

Ray, S.K., Moss G.: Fluorochemicals as working fluids for small Rankine-cycle power units, *Advanced Energy Conversion*, **6** (1966), 89-102.