THE ECONOMIC: 4ND ENVIRONMENTALLY SOUND HANDLING OF GEOTHERMAL SULFUR BYPRODUCTS: A CASE HISTORY

MURRAY G. GRANDE

Northern California Power Agency
P.O. Box 663
Middletown, California 95461
U.S.A.

Key words: noncondensible rases, hydrogen sulfide, abatement methods, The Geysers

1. ABSTRACT

The Geysers, located in California's Mayacamas Mountains 75 miles north of San Francisco, is the largest dry steam geothermal resource in the world. While steam quality at thc Gcyscrs varies from one end of the field to the other, the presence of noncondensible gases in the steam, specifically hydrogcn sulfidc (H2S), cannot be avoided. Permit and regulatory requirements for all Geysers power plant operators mandatc that thc H2S cntering a steam turbine be abated at some point tu a level that presents no risk to the public or the environment Various methods and technologies are utilized to accomplish this abatement. The most common abatement method utilizes the Stretford redox technology, where H2S reacts with a vanadium solution to form an elemental sulfur by-product.

A varietv of factors have historically been a challenge, both from an economic and environmental perspedive, to finding an acceptablc means of managing the Stretford sulfur by-product. This paper will trace the ongoing cndcavors of onc Gcyscrs powcr plant operator, namely the Northern California Power Agency (NCPA), to find an acceptable option for managing its geothermal sulfur by-product

2. INTRODUCTION

NCPA owns and operates two power plants and the associated stearn field at the Geysers Each pnwer plant. contains two, 60 megawatt turbine generators and one Stretford redox system to treat the noncondensible gases removed from the condenser of each turbine generator. The H2S concentration of the noncondensible gases in the steam coming intn the plant averages 160 ppm, and the sour gases that flow to the Srretford system average 4 percent H2S. Permit conditions for NCPA require that the sweet gases exiting the Stretford system be limited to 40 ppm. As a result of the abatement of H26 from thc noncondensible gas stream, approximately 1400 metric tons per year of elemental sulfur are produced in the form of a cake that contains 60 percent moisture. This means that the annual sulfur by-product production is approximately 3500 metric tons per year.

Sulfur cake production at both NCPA plants is accomplished by means of a rotary drum vacuum filter As the sulfur is filtered from the slurry produced by the Stretford system. a continuous supply of wash water is applied to the sulfur The wash water acts *to* reduce the amount of soluble vanadium that has infused the sulfur. The washed sulfur is then removed from the filter drum surface and deposited into a 15 cubic meter bin for transport to the disposal site.

3. INITIAL OPERATION

Startup of NCPA Plant 1 occurred in January, 1983. Immediately thereafter, the challenge of finding a suitable option for the sulfur disposal began. There wcrc two primary factors that worked io limit alternatives. First, there was the off spec quality of the sulfur produced by the Stretford system. The physical form of the sulfur cake, coupled with residual sodium and ash contamination. virtually eliminated any possibility of commercial applications for the sulfur. Secund, a hazardous concentration of vanadium was present in thr sulfur cake. Vanadium is a regulated constituent in the State of California. The data in Table 1 lists the concentration criteria For certain metals as stated in Title 22 of the California Administrative Code (1985). Listed next to the hazardous criteria is a typical analysis ofthe sutfur cake initially produced by NCPA Plant I. The hazardous level of vanadium eliminated other disposal alternatives. Only costly hazardous waste landfilling disposal was available It became clear that in order to reduce disposal costs it would be necessary to render the sulfur cake nonhazardous.

Initially, the only hazardous constituent in the sulfur was residual vanadium, Since vanadium is a soluble metal, NCPR decided to improve the wash efficiency of the rotary drum vacuum filter. Modifications to the wash spray were made by increasing wash water ilow and improving spay nozzle design A successful spray wash system design was ultimately incorporated that reduced soluble vanadium concentrations to levels significantly below the hazardous criteria.

Changing the status of the sulfur cake from hazardous to nonhazardous provided disposal alternatives to hazardous waste landfilling disposal However, the off spec quality of the sulfur still limited alternatives to nonhazardous landfill disposal

4. NONHAZARDOUS LANDFILL

Startup of NCPA Plant 2 occurred in December, 1985. This new operation doubled the production and the cost of managing the sulfur cake NCPA had heen landfilling the sulfur cake as hazardous waste at a cost of approximately $265 per metric ton. This cost included transportation to the nearest hazardous waste landfill site in California! which was 325 kilometers from the two Plants. State and local taxer collected for the generation arid disposal of hazardous wastes in California were also included. The increased product inn rate dramatically increased the cost of hazardous waste landfilling disposal to nearly $930,000 per year. Sulfur cake disposal had become the single largest line item in the Plants' operating budget.

In July, 1986, NCPA successfully negotiated with the Sonoma County Department of Public Health, the Sonoma County Depanment of Public Works, and the California Regional Water Quality Control Board. North Coast Region io allow disposal of thc NCPA sulfur sake to the Sonoma County nonhazardous municipal landfill facility. NCPA agreed to a protocol which required that every load of sulfur be analyzed for vanadium prior io shipment for disposal This requirement created a significant burden to the Plants' laboratory staff, and it was partial justification to hi-e an additional laboratory technician. Disposal and transportation costs were reduced to approximately S35 per metric ton. This represented an 87 percent reduction in disposal costs.

The cost savings associated with nonhazardous landfilling was the solution to the sulfur management problem until more detailed analyses of sulfur from NCPA Plant 2 were done prior to transport

TABLE 1

HEAVY METAL THRESHOLD CONCENTRATIONS AND TYPICAL SULFUR CAKE ANALYSIS

	Criteria[1]		Sulfur Cake Discharge from Filter, Plant 1	
PARAMETER	TTLC (mg/Kg)	STLC (mg/L)	Total[2] (mg/Kg)	WET-Soluble[3] (mg/L)
Antimony & compounds	500	15	<20	<0.2
Arsenic & compounds	500	5.0	0.6	0.019
Barium & compounds[4]	10,000	100	<5	<0.05
Beryllium & compounds	75	0.75	<1	<0.01
Cadmium & compounds	100	1.0	7	<0.05
Chromium(VI) & compounds	500	5.0	NA[5]	<0.005
Chromium & coinpounds	2,500	560	<5	≤0.05
Cobalt & compounds	8,000	80	<5	<0.05
Copper & compounds	2,500	25	<2	<0.02
Lead & compounds	1,000	5.0	<5	<0.05
Mercury & compounds	20	0.2	8 4	<0.01
Molybdenum & compounds	3,500	350	<20	10.2
Nickel & compounds	2,000	20	<5	<0.05
Selenium & compounds	100	1.0	<0.1	<0.005
Silver & compounds	500	5.0	<1	<0.01
Thallium & compounds	700	7.0	<30	<0.3
Vanadium & cornpounds	2,400	24	290	30
Zinc & compounds	5,000	250	<5	<0 05

[1]TTLC--Total Threshold Limit Concentration,
STLC--Soluble Threshold Limit Concentrations (Section 66694 California Administrative Code, "Title 22, Environmental Health." (30:66002-67651, January 12, 1985)

[2]Wet weight basis

[3]WET--Waste Extraction Test [concentration in extract).

[4]Excludes barium sulfate.

[5]NA--Not analyzed; results for total chromium are below regulatory criteria for chromium (VI).

to the nonhazardous disposal site. The preliminary analyses results revealed that total concentrations of mercury were high enough to characterize the sulfur from Plant 2 as hazardous, even though vanadium concentrations were below hazardous levels. Mercury is indigenous to the Geysers area as indicated by the significant number of mercury mines in the area. Mercury vapor is transported with the geothermal steam produced from certain areas of the NCPA lease, and it is the source of natural contamination of the steam. There is a strong affinity herween sulfur and mercury, and when the H_2S is oxidized to sulfur during the Stretford process. the mercury chemically bonds; to the sulfur. This mercury-sulfur compound is virtually insoluble, and water washing is ineffective in removing it from the sulfur cake. Even after melting the sulfur, mercury is still present. The presence of mercury limited Plant 2 sulfur disposal to hazardous waste landfilling.

Even though nonhazardous landfilling of Plant 1 sulfur was a relatively cost effective management program, there were potential problenis with this program as well. Waste minimization programs mandated by the State of California threatened the long term future of nonhazardous landfilling. The long term liability risks associated with landfilling the sulfur as hazardous or nonhazardous were also a concern to NCPA. Since Plant 2 hazardous sulfur disposal was still very expensive, aid landfilling of any kind was both an environmental and liability risk, NCPA determined to find another means of managing its sulfur by-product.

5. SULFURIC ACID

The pursuit of an alternative io landfilling the sulfur cake pruduced at the NCPA power plants once again encountered the two previously mentioned impeding factors, nff spec quality sulfur and hazardous concentrations of a heavy metal. During this pursuit. there was no known technology to reduce the mercury concentration in the sulfur It was concluded that any alternative had to be compatible with hazardous levels of mercury contamination

Also during this time. NCP.4 was approached by a sulfuric acid recycling facility located near San Francisco to discuss the possibility of utilizing the hazardous sulfur as feed stock. The sulfur cake would be reslurried and blended with spent sulfuric acid and fed to a furnace for conversion to uncontaminated sulfuric acid. NCPA saw this alternative as a means of eliminating landfilling as a management option However, the facility charged fees comparable to hazardous waste landfill. For approximately six months, NCPA shipped its sulfur cake to the sulfuric acid facility for test purposes At the conclusion of the test period, ihe facility was no longer able to accept the sulfur cake due to process problems that occurred within its furnace because of the mercury and vanadium contained in the cake.

6. MODIFIED SULFUR CEMENT

During the sulfur cake to sulfuric acid test burns, NCPA continued to investigate other options that would accept hazardous off spec quality sulfur In 1990, NCPA was introduced to the relatively new technology of modified sulfur cement (MSC) by the California Department of Toxic Substances Control (DTSC). The DTSC: had been working with industry to find alternatives to landfill for heavy metal bearing sludges MSC is a thermoplastic material, developed by the United States Bureau of Mines in cooperation with the Sulfur Institute, which is produced when sulfur is combined and reacted with organic polymers The end product is a highly currosion resistant material with compressive and tensile strengths twice those of traditional hydraulic portland cements Contaminants that may exist in the sulfur, such as mercury, are bound up by the polymers io render them nonhazardous within the MSC As a thermoplastic material, MSC can be heated above its melt temperature and be used for numerous industrial applications. These include low level radioactive and mixed waste encapsulation, manufacture of corrosion resistant pipe for sewer lines, and other construction materials MSC appeared to resolve the issues of hazardous mercury contamination and the commercial viability for an off spec quality sulfur by-product

With encouragement from DTSC. NCPA undertook the project of designing, permitting, and constructing a MSC process facility Since MSC production was a relatively new technology, only a few manufacturing facilities existed in the world. NCPA consulted with several experts in the field of sulfur melting and MSC manufacturing to discuss design and preliminary product marketing Figure 1 shows the process flow diagram for the facility designed by NCPA.

Prior to NCPA's decision to produce MSC, MSC had been manufactured utilizing commercial grade virgin sulfur Having to pay for the sulfur kept the price of MSC significantly higher than that of portland cement, which was the primary market in which MSC would contend It was anticipated that NCPA could market its MSC at or near the cost of portland cement, while still producing a profit. It was projected that at this competitive price, the MSC market would expand heyond the production capacity of NCPA In anticipation of this, NCPA pursued agreements with

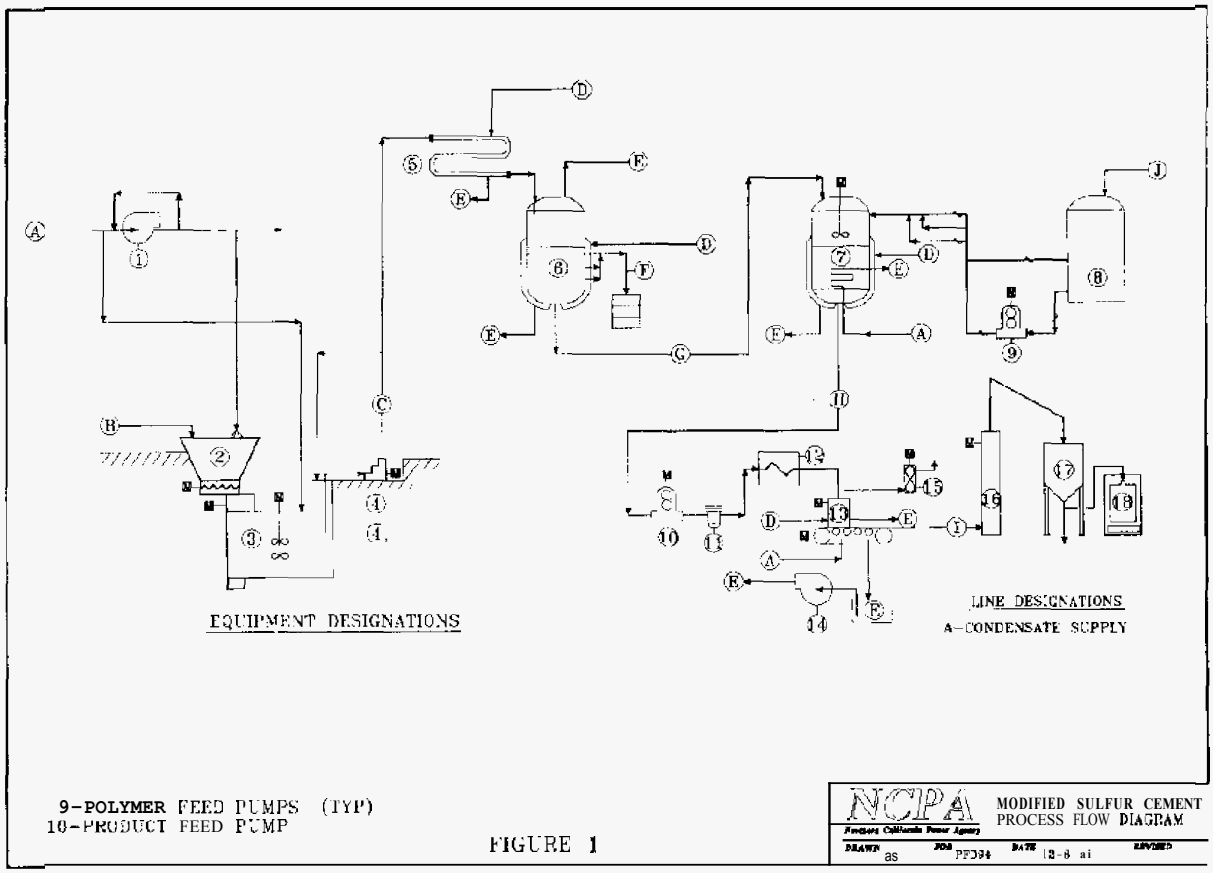

FIGURE 1

other Geysers power plant operators to obtain their sulfur by-product The facility was designed to handle the extra capacity.

In addition to design and marketing efforts, it was necessary to expend a significant amount of time on permitting the facility. Since the facility wnuld he handling hazardous wastes, it would bc necessary to obtain either a hazardous waste treatment facility permit or permit exemption from the DTSC. Since a treatment permit requires that the find product be nonhazardous, and since the MSC produced by NCPA was technically hazardous because it still contained mercury, a treatment permit wuuld nut be granted However; since the physical characteristic of the MSC is to molecularly bind up the hazardous constituents such as mercury, in such a way as to render them nonhazardous, the MSC process could be exempt from permitting requirements. From the project's inception, the DTSC had looked favorably toward granting a permit exemption. However, as the exemption deadline drew near: DTSC began to balk and delayed the decision. In February, 1992, NCPA was finally forced to demand a decision, at which time DTSC denied the exemption application. The DTSC gave several unsubstantiated reasons for the denial. The underlying reason appeared to be DTSC's fear of granting an exemption to a new, rclatively unknown technology.

The failure to obtain the permit exemption doomed the MSC process facility, and, at the time, compelled NCPA to a future of costly, environmentally unsound, landfilling of its sulfur byproducts.

7. MERCURY REMOVAL

During the same time period the NCPA's permit exemption for the MSC process was denied, a new technology for removing mercury vapor from gas steams was being tested at a Geysers powcr plant operated by another company. The technology was an extension of the natural gas industry technology that utilizes filter beds of sulfur impregnated activated charcoal tu remove mercury from natural gas, This test was the first attempt at applying that technology to the geothermal industry. Preliminary resulrs from the test indicated that the filter media did remove the mercuty vapor from the Stretford sour gas stream. By removing the mercury upstream of the Stretford plant., the mercury was prevented from reacting with the sulfur during the oxidation of the H2S. As a result? the sulfur produced hy the Stretford reaction contained little or no mercury.

This test was timely and of significant value to NCPA. In June 1992, NCPA decided to build and install its own mercury filter on the sour gas stream at the NCPA Plant 2, where mercury levels in the sulfur continued to be above hazardous levels. The filter was installed and made operational in September 1992. While the basic theory of the filter was the same as that utilized by the natural gas industry, certain peculiarities exist in the application to geothermal sour gas streams. The most significant and potentially the most dangerous was the fact that most sour gas streams from geothermal steam turbines contain varying concentrations of oxygen that enters the gas streams by means of air leaks in the main condensers The oxygen and H2S present in the gas interface with the activated charcoal filter media and can start an exothermic reaction. The charcoal acts as a catalyst far the reaction. Through the careful and controlled introduction of the sour gas to the filter media bed, it was learned that this reactinn can be controlled.

The success of the mercury filter was immediately evident. The graphs in Figure 3 show the decline of mercury in the Plant 2 sulfur with respect to time. The projected life of the filter bed under ideal conditions is 3 *years.* Figure 3 also shows the decline in the mercury removal efficiency of the filter with respect to time, depicted by a gradual increase in sulfur cake mercury content. The efficiency loss is due to moisture contamination that increasingly inhibits mercury absorption. Operating experience has demonstrated that bed life can be extended by periodically "turning over the bed". This is achieved by exchanging dry activated charcoal from the top of the bed with moist charcoal from the

bottom of the bed that is near the gas entry point, As can be seen in Figure 2, mercury removal efficiency returned to that of filter startup conditions once the charcoal bed was turned over. Keeping the charcoal as dry as is possible is essential The cost of the charcoal is such that most efforts made to extend bed life are economicallyjustifiable.

Steam quality changes occurred within the NCPA steam field so that mercury concentrations began to increase above hazardous levels at NCPA Plant I as well In May 1993, a mercury filter was also installed at Plant 1.

8. BENTONITE SCLFUR

Removing the hazardous constituents vanadium and mercury from the sulfur cake characterized sulfur cake as a nonhazardous H2S abatement by-product. The status as nonhazardous cake created other opportunities for managing the sulfur. Landfill disposal was no longer the only option. Efforts were initiated to find a commercial use for the by-product. However. the issue of off spec sulfur still needed to be addressed.

NCPA believed that to find a truly profitable market for the sulfur cake, the cake would have to be processed into a more usable form. During the design of the MSC process facility: contacts were made within the sulfur industry regarding other value added sulfur products. One such contact was a Canadian company that manufactured a product known as bentonite sulfur. Bentonite sulfur is a formed sulfur pastille containing 10 percent bentonite clay, The product is used in the agricultural industry as a soil amendment for pH adjustment and For fertilizer, Elemental sulfur is commonly used in soil amendment and fertilizer applications However, there are many problems associated with applying the sulfur to the soil. The use of finesulfur particles causes hazardous. potentially explosive, dust problems, end the use of larger sulfur particles inhibits the bacterial breakdown of the sulfur into the soil. Bentonite sulfur has the benefit of large particle application to the soil coupled with the benefit of fine particle bacterial breakdown in the soil. The bentonite sulfur pastille is approximately 1/4 inch in diameter with little or no dust. Once in the soil, the bentonite absorbs water and splits the pastille into fine, dust like particles. Despite commanding a premium price, bentonite sulfur has a very strung and expanding market share.

NCPA was very interested in the possibility of producing bentonite sulfur for two reasons. First, the location of the NCPA power plants at the Geysers is local to the huge California Central Valley agricultural market, and second, the existing MSC process design could he modified at minimum expense into a bentonite sulfur process. In March 1993, NCPA entered into a technology exchange agreement with the Canadian company. NCPA would manufacture bentonite sulfur, and the Canadian company would market and sell the product. Profits from the sales would be shared. Like most *commercial* manufacturing ventures, increases in the production of bentonite sulfur would reduce production costs. This fact, coupled with the fact that the California market was able to accept more product than NCPA was capable of producing when utilizing NCPA sulfur only, motivated NCPA to seek a means to increase production. To this end, NCPA once again approached all the sulfur producers at the Geysers to establish sulfur agreements, where NCPA would process their sulfur into bentonite sulfur for a fee comparable to their existing programs. The other sulfur producers would benefit by securing a local, stable facility that would accept their sulfur for the long term, and NCPA would benefit from increased production and process income

Since NCPA already had a relatively low cost sulfur management disposal alternative (nonhazardous landfilling), the bentonite sulfur

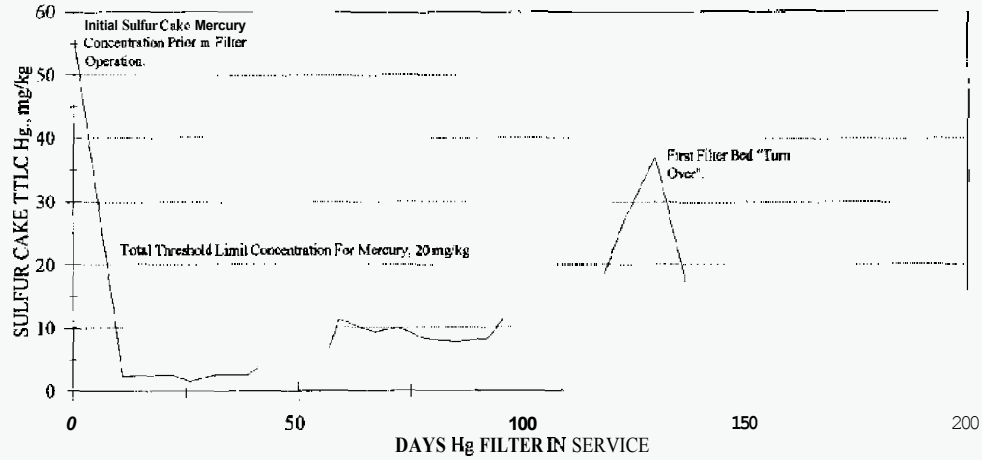

NCPA PLT 2 MERCURY REMOVAL EFFICIENCY
SULFUR *CAKE* Hg CONCENTRATION vs. TIME

FIGURE 3

facility had a much greater need to provide stand alone economics It could not rely heavily upon the large avoided disposal costs that were associated with hazardous landfilling and used in initial MSC project justification. The bentonite sulfur project relied upon income from product sales as well as income from sulfur process fees charged to other Geysers operators Table 2 shows the basic economics associated with the project

At the same time that NCPA began the preliminary work on the bentonite sulfur project, NCPA also began to evaluate the overall status of its geothermal facilities in view of the steam pressure declines of the Geysers resources. For reasons relating to the uncertainties of the resource longevity, NCPA opted, in June 1993, not to pursue the bentonite sulfur alternative despite the prospect of profitability.

TABLE 2

BENTONITE SULFUR PROJECT ECONOMICS

15 Year Project Life

Bentonite Sulfur Revenue (NCPA Receiving 60% of Gross Sales)	$10,399,400
Sulfur Process Income	$12,519,472
Total Gross Revenue	$22,918,872
Total Cost (Labor, Utilities. Materials, Debt Service. License Fees, ect.)	$20,886,434
Net Revenue	$ 2,032,437
Avoided Disposal Costs (Nonhazardous Disposal)	$ 2,755,162
Net Budget Change	$ 4,787,600

9. SOIL AMENDMENT

Even though NCPA opted out to pursue the bentonite sulfur option, it was still motivated to find a more environmentally responsible alternative to the use of nonhazardous landfilling. In February 1993, NCPA was able to contract with a company in the California Central Valley that would accept the sulfur cake for a small fee. The sulfur cake is blended with gypsum to produce a soil amendment fertilizer. The cost of the soil amendment option is comparable to the nonhazardous landfilling option. The perceived liability associated with this alternative is less than that of landfilling, and the sulfur is providing a benefit as a raw material rather than remaining a liability as a waste.

10. CONCLUSIONS

It would have to be concluded that NCPA's efforts to find a more economically and environmentally cnmpatihle alternative for the managcmcnt of its geothermal sulfur by-products has been a success Going from a high cost hazardous waste landfill program to a relatively low cost fertilizer feed stock option will save millions of dollars for NCPA throughout the life of the projcct Even more important in the environmentally aware climate of today, NCPA's efforts reduced the amnunt of wastc disposed in landfill. Though the efforts to produce a profit from using sulfur cake to produce bentonite sulfur were unsuccessful, the experience helped define the limits of what can be accomplished by managing sulfur cake cost effectively. NCPA continues io look for more profitable alternatives to managing its geothermal sulfur by-product

11. ACKNOWLEDGMENTS

The author wishes to thank the NCPA management for their permission to publish this paper, and Mr. Ron Suess for his editing expertise