DRYING OF FIBROUS CROPS USING GEOTHERMAL STEAM AND HOT WATER AT THE TAUPO LUCERNE COMPANY

NEIL PIRRIT(1) and MICHAEL DUNSTALL(2)

(1) Taupo Lucerne Limited, P.O.Box 13% Taupo, NEW ZEALAND.
(2) Geothermal Institute, The University of Auckland, Private Bag 92019, Auckland, NEW ZEALAND

Keywords: Direct use, drying, cascaded use, heat exchangers, finned tube, agriculture

ABSTRACT

Taupo Lucerne Limited (NZ) uses geothermal steam and hot water as the heat source for the drying of lucerne (alfalfa) into 'De-Hi', produced from the fibrous part of the plant, and 'LPC' (lucerne protein concentrate) which is a high protein product produced from extracted juice. What was originally a pilot plant operation has been developed into full scale production plant producing approximately 3000 tonnes per annum of dried product for the New Zealand and Australian markets. Dried timber is also produced on the site in a separate batch operation. Drying methods used for each of the products produced at the plant are described. This paper also includes a description of recent modifications to the plant heat exchanger coils, to allow the use of high pressure separated hot water from the Ohaaki geothermal power station, rather than the saturated steam supply previously used. Possibilities for future improvements and expansion of the timber drying operation are discussed.

1. INTRODUCTION

1.1 Background

Taupo Lucerne Limited was formed in 1972 to develop the use of geothermal steam and hot water for drying fibrous agricultural crops. The plant is located at Broadlands, approximately thirty (30) kilometres North-East of Taupo in the Central North Island of New Zealand, on a four (4) hectare site adjacent to the Ohaaki Geothermal Power Development (Fig. 1). The Ohaaki power development is operated by ECNZ (Electricity Corporation of New Zealand) who supply the Broadlands Lucerne Company with all geothermal fluids. High pressure steam (8 bar) is separated on-site, supplied as two phase fluid from the stations production well system. Separated hot water from the Ohaaki power station's reinjection system is also utilised.

The drying facility provides a means of adding value to the lucerne (alfalfa) hay which is grown from November until April in this area. A number of contract growers provide feed stock for the plant. If the lucerne is cut, windrowed and collected quickly for drying the retention of Vitamin A, protein and colour will be high compared to the field dried product, resulting in a higher commercial value. Drying the crop at the point where it is grown reduces transport costs and, in this case, allows use of low cost geothermal fluids to provide the heat source. Product appearance is a very important aspect of fodder marketing, and the colour of the product is one of its most important characteristics. In comparison to fodder dried conventionally in fossil fuelled driers, geothermal driers operate at lower temperatures and do not expose the fodder to contamination by the products of combustion, resulting in a final product of higher quality (Lienau, 1990). Farming and forestry are the major industries in the area and, since the raw material is readily and immediately available, round wood and timber is also dried at the plant. Sawn timber, fenceposts and poles are produced in the timber drying operation.

Geothermal steam and hot water is used as the heat source for all processes. Steam is obtained from a deep two phase well in the adjacent Ohaaki steam field. Hot water is used after electricity has been produced from the initial flash by ECNZ, who operate the Ohaaki geothermal power station. Approximately four (4) tonnes of steam per hour is used for coagulation of the lucerne juice and operation of the roundwood drying cylinder. Up to one hundred (100) tonnes per hour of hot water is used in the heat exchange system for drying the fibrous lucerne material.

The fibrous lucerne material is dried in an air stream heated by geothermal hot water which is passed through finned tubular type heat exchanger units. Initially only dry separated geothermal steam was used in the plant, at approximately 175°C (Freeston and van de Wydeven, 1979). In 1993 the system was converted by the installation of additional heating coils to use the hot water which remains after flash steam has been removed for generating electricity. Separated hot water is now used at 148°C. The system is steam purged to prevent silica build-up in the heat transfer coils.

1.2 Products Produced

The following products are produced on site;

De-Hi
Lucerne is direct harvested into the plant where it is steam heated and pulped. The stems and leaves of the plant are then crushed and squeezed to extract the juice. De-Hi is the remaining fibrous residue of the plant, which is dried and pelletised to form a stock food which is easily transportable, high in protein and has a long shelf life. Considerable volumes of this product are used during transportation of sheep and New Zealand's live sheep trade has been a major market for this product, which is also used by the poultry, deer and rabbit farming industries. Up to 3000 tonnes per annum are produced.

Protein Concentrate (LPC)
Lucerne protein Concentrate (LPC) is the dried juice extracted from lucerne. This product is very high in protein (48% by weight) and is used in the egg industry as a feed supplement for chickens. The high level of xanthophyll in this product gives good colour to the egg yolk without the addition of artificial carotene. An interesting emerging market for this product is the health food industry, where it is used as an ingredient in health drinks. Annual production is up to 200 tonnes of dried product.

Dried Timber and Roundwood (Pinus Radiata)
Dried timber and round wood is produced at the same site (Fig. 1). At present only one drying chamber is used. This chamber uses high pressure steam (10bar) as the heat source and is run as a batch operation. The main market for this product is the local farming industry. Up to 1000 cubic metres of dried fenceposts, poles and

sawn timber products are produced per month. Drying timber before use increases strength properties, resistance to biological attack, dimensional stability, and fastener retention. At the same time it reduces weight, and consequently shipping costs (Mujumdar, 1987). Drying therefore adds considerably to the value of this locally produced raw material.

2. PRODUCTION PROCESS

2.1 Steam Supply

When operations began in 1972 all of the heat for the operation was supplied from well BR27. Two phase fluid was piped to the plant where separation of the steam and water took place, supplying approximately 14 tonnes per hour of saturated steam at a pressure of 8 bars and temperature of 170°C.

In 1993 modifications were made to the air heaters to allow them to run on hot water from the reinjection system. Waste hot water from the Ohaaki Geothermal Station is reinjected at depth in a number of wells outside the field margins for waste disposal and reservoir pressure support. One of these injection wells, BR7, is located on the plant site and approximately 100 tonnes per hour of the hot water piped to this well is now tapped off before reinjection and used in the drying plant. The original high pressure steam supply system was retained to supply the reduced steam demand.

Steam and hot water flows are shown in flow diagram form in Figure 2. A tee fitting at the wellhead of BR27 allows two phase fluid at a well head pressure of 17 bars and an enthalpy of 1000kJ/kg to be passed to an on-site separator at the lucerne plant, Ohaaki separation plant 5, or both. During the growing season, the well normally supplies both separation plants. Approximately 30 tonnes per hour of fluid is passed to separation plant 5 where it is mixed with fluid from a number of other wells and flashed, first at 11.8 bars and then at 4.5 bars, to supply HP (high pressure) and IP (intermediate pressure) steam for the power station. The remaining separated water is then pumped to the reinjection system, of which BR7 is a part. Well BR27 produces approximately 30-40 tonnes per hour (5-7 MWt) of additional fluid which is piped to the on-site separator at the lucerne plant. This separator, originally used at Wairakei, is operated at a pressure of around 8 bars to provide the 4 tonnes per hour of steam (3.1 MWt) currently required. Water from the on-site separator is at a pressure and temperature unsuitable for reinjection so it is passed to an atmospheric silencer before surface disposal in a nearby area of steaming ground.

2.2 De-Hi Production

Originally, a fixed bed dryer was used for the production of the dried fibrous product (DE-HI) (Freeston and van de Wydeven, 1979). Hot air was passed over the product sitting on a mesh, in a batch operation, but this plant was destroyed by fire in 1984. Instead of rebuilding to the same design it was decided to convert to a continuous pneumatic conveying dryer where the product is carried through the process stream by heated air, which then performs both drying and transport operations. After crushing to remove juice the fibrous part of the crop (stems and leaves) are passed to the heated air transport drying system. Drying is done in three stages, with the product being cycloned at each stage to allow removal of moist air and the injection of fresh hot air. (see Fig. 3) The complete drying cycle takes about two to three minutes, and evaporates approximately 95% of the water originally present. This reduces the moisture content of the crushed plant material from an average of 68% to 10% by weight. An evaporation rate of up to 8000kg of moisture per hour has been achieved but normal operation is around 6000kg per hour.

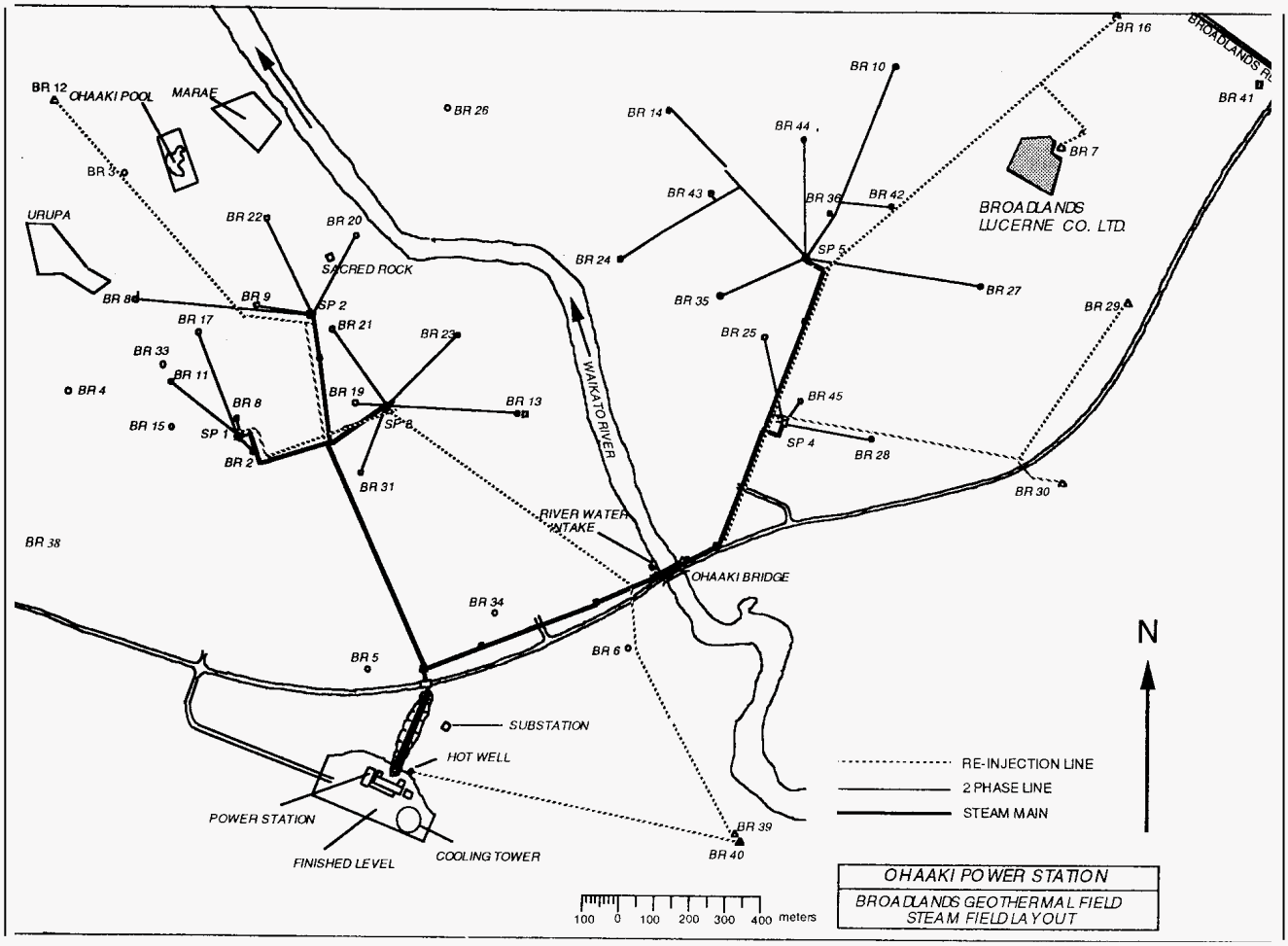

Figure 1: Location of the Taupo Lucerne Company within the Ohaaki steamfield.

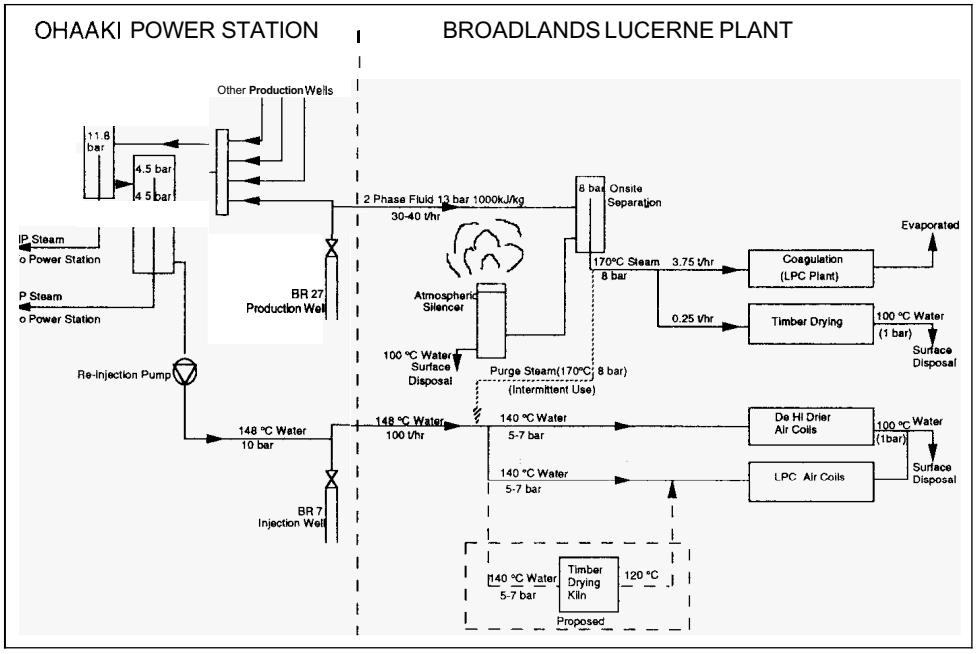

Figure 2: Flow diagram for steam and hot water supply to the Taupo Lucerne Company.

The fibrous product is then passed to a hammer mill and pellet press which produce about one tonne of dried product from five tonnes of green feed stock.

Heat for the drying process had been supplied by condensing steam at 170°C in finned tube air heater coils. In order to reduce the total steam consumption of the plant the air heaters were modified to accept separated water from the Ohaaki reinjection system at an inlet temperature of 148°C. At this temperature the water is very close to the silica saturation temperature. Pressure from the reinjection system is initially around 10 bars but this reduces to approximately 5-7 bars as the water is circulated through the finned heat transfer coils, two to each drying stage, operating in series with the water then discharged to waste.

The modification involved use of the original steam coils along with the installation of additional coils to approximately double the heat transfer area. Hot water flows in two passes through the two set of coils whereas previously steam was condensed in a single pass. New temperature controls were required to complete the changeover to hot water use. As a result of this conversion overall steam consumption dropped from 14 tonnes per hour (10.8 MWt) to 4 tonnes per hour (3.1 MWt). Current steam usage is now restricted to the juice coagulator and the timber drying chamber. In both of these operations the steam is injected directly into the chamber and cannot be easily replaced by a hot water source.

The water temperature drops from approximately 140°C at inlet to 100°C at the outlet of the air heater coils and although this results in the water becoming super saturated with respect to silica no deposition problems have been noted in the heat exchanger coils. It is thought that a fairly low residence time (on the order of minutes) and the rather slow kinetics of silica deposition are the main reason for the lack of scaling. Silica deposition can be clearly seen, however, in the surface discharge channel which is fed by the heat exchanger outlet. Some silica scaling problems were expected after the change over to using separated water through the heat transfer coils instead of dry steam. At the time of conversion it was suggested by ECNZ, who supply the geothermal fluids, that a purge of steam during non operating hours would

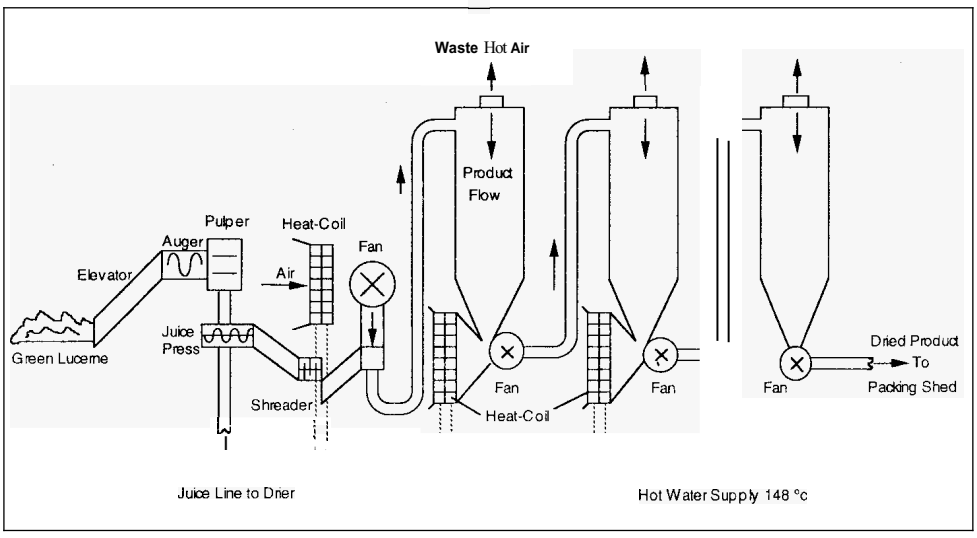

Figure 3: Production flow diagram for the De-Hi plant.

remove this deposit and this practice has been followed, proving successful to date. The extent to which this steam purge is required for the successful control of silica is not known but it serves the additional purpose of preventing the cooling of the heat transfer coils while they are still filled with silica laden water, which would allow scale formation, and excludes air from the heat exchangers during short term shut down.

2.3 LPC Production

After pulping the lucerne, the juice extracted is dried in a separate operation to obtain lucerne protein concentrate (LPC). This product is a fine dark green powder consisting of the solids originally suspended in the juice. The juice is pumped from the screw press to a coagulator stage where geothermal steam is injected into the juice line to coagulate the solids before centrifuging and drying. Centrifuging concentrates the solids present in the juice before final drying of the juice in a multiple fixed bed type dryer. Heated air for this dryer is supplied from hot water coils in the air supply system (Fig. 4). After drying the product is pelletised, to allow easy handling and distribution.

The steam still used in the production of the high protein concentrate is sourced from hot separated water from the low volume bore previously used to supply the whole plant (BR27). This supply of two phase fluid is at a higher temperature and pressure (192°C, 13 bars) than the water in the reinjection system (148°C, 9.8 bars), since it is supplied directly from the well head, before the first stage of flashing for the Ohaaki power plant. Ideally, the steam needed for coagulation could be produced by flashing a further quantity of hot water at 148°C to produce the required four tonne of steam per hour. Obtaining flash steam from the lower temperature separated water would, however, take the silica saturation to a higher level and would also result in a higher surface discharge of silica laden water. It is anticipated that discharge consents for such an operation may be difficult to obtain, although mitigating factors to be considered include reduced discharge from the on-site separator and an increase in overall efficiency of use of the geothermal resource.

2.4 Timber Drying

High enthalpy steam generated from the 13 bar two phase fluid supply is also used for drying roundwoods (pinus radiata) in a batch type direct steam drying system. Dry steam at approximately 170°C is injected directly into the drying cylinder at an initial rate of two tonnes in the first 15 minutes to raise the cylinder temperature after which about a quarter of a tonne per hour is fed in to maintain temperature. Kiln temperature is maintained at 120°C for between 6-12 hours depending on the size of the roundwood being dried. Up to 1000 cubic metres can be dried monthly. The steam softens the wood fibre allowing the sap to drain out and after a period of 48 hours to allow for cooling the timber is ready for use or treatment (Fig. 5).

During initial heat up period the heat flow rate to the timber drying cylinder is high (5-6MWt) but this rate of heat flow is only required for a short period and the flows required to maintain kiln temperature throughout the cycle are around (150-200kW).

Kiln drying of timber using geothermal hot water is currently being explored. The intention is to produce high grade finishing timber for framing and joinery. Hot water from the reinjection system would be used in this system which would also operate as a batch type operation, drying approximately 50 cubic metres of timber every two to three days. Average hot water use will be 35 tonnes per hour at 148°C with a temperature drop across the coils of approximately 20°C to meet a heat load of around 800kW. It is intended that whenever possible hot water discharged from the kiln air heaters will be piped for use in the lower temperature heating coils of the lucerne drying plant to further use the residual heat before discharge. Precautions to be taken against silica scaling will be similar to those used in the pneumatic conveying drying system. In view of previous experience no serious scaling problems are anticipated. The main drawback of such a system is that the uniform kiln temperatures essential for the even drying of timber are difficult to obtain when heat is obtained by sensible cooling of hot water.

Both the domestic and export markets for high quality dried pine products are expected to strengthen with growing acceptance of radiata pine as a finishing grade timber. The provision of a low cost energy source, geothermal separated water (which is currently disposed of as a waste product), and the location of the Ohaaki power station within plantation forests provide a strong basis for expansion in this area of operation.

3. OPERATION

The presence of corrosive geothermal gases (H_2S) means that electrical and control systems require protection from atmospheric conditions, as do some items of exterior pipe work. However, location of sensitive items of equipment within on-site buildings, and protective painting and sheathing of outdoor equipment have eliminated most problems. Maintenance on the geothermal equipment is moderate, with the main replacement items being

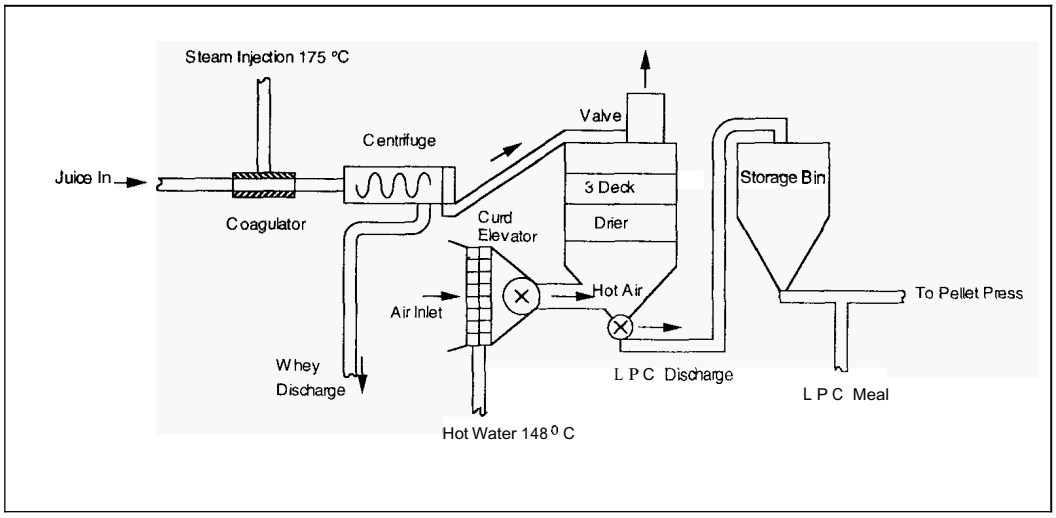

Figure 4: Production flow diagram for the LPC plant.

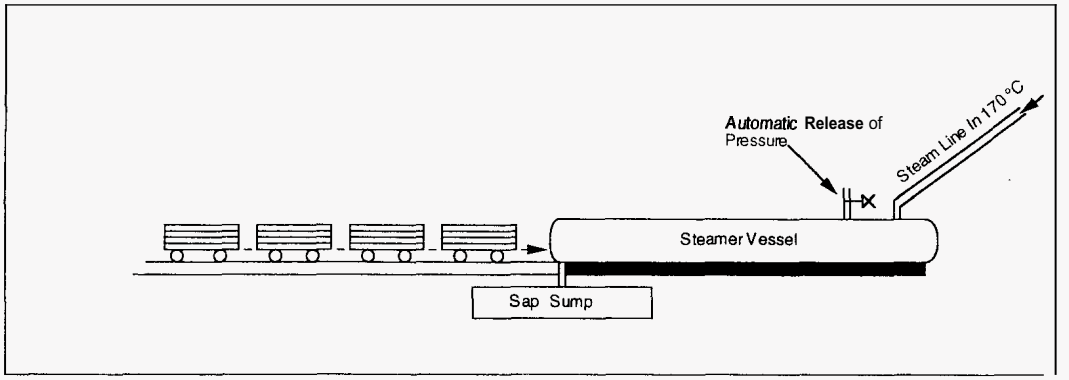

Figure 5: Timber drying cylinder operation.

operating valves. In comparison to maintenance of material handling equipment, the geothermal equipment is not considered to have any particular maintenance difficulties. Fortunately the gas levels are low enough that it has not been necessary to provide filtered air to any of the electrical control systems.

The system is relatively simple to operate and only one operator is actually required to run the plant, although two are used for safety reasons. Since the system was designed to minimise fluid residence time within the heat exchangers the plant has a short warm **up** period, and responses to changes in load can be compensated for quite quickly. This allows considerable variations in product flow rate to be handled without **loss** in product quality. Six **full** time staff manage and maintain the plant on an annual basis but during the growing season the plant runs a double shift, providing seasonal work for another four workers. Growing, harvesting and transportation related to the lucerne plant also provide employment during the growing season.

Because of the seasonal nature of the operation the annual load factor for the plant is rather low. Annual energy use is estimated at 14 TJ (excluding timber drying) and with an installed thermal capacity of **7** MWt this gives at load factor of 6.5%. Calculating a sensible load factor for the timber drying operation is a little more difficult since it is not clear what thermal capacity should be used. The maximum heat flow rate to the drying chamber is quite high (6MWt), but it is of such short duration (15min in a 12 hour cycle) that the usual design constraints do not apply. When the nominal kiln heat load is used the plant capacity factor increases considerably. The current timber drying operation uses just 200kW, but this is on an almost continuous basis. Annual energy use for timber drying is about **6** TJ, giving a load factor of about 9% **for** the operation overall. Expanding the plants capacity to dry timber, which is a twenty four hour, year round operation, has the potential to greatly improve the annual load factor. Currently, timber drying accounts for almost one third of the annual energy use while representing less than **3%** of the plant thermal capacity.

4. CONCLUSIONS

The geothermal drying of agricultural crops at Taupo Lucerne Limited has evolved from a proof of concept pilot plant into a successful commercial operation. Using the heat of the geothermal fluid directly in the process increases the efficiency of use of a natural resource. Recently, modifications have been made to existing heat exchanger equipment to enhance the inherent efficiency of the direct use system. By using separated water instead of saturated steam to provide a large proportion of the direct heat needs, the lucerne plant has provided a means for cascading a portion of the waste fluid available after generation **of** electricity. Cascading improves the overall efficiency of resource use at Ohaaki by utilising a **waste** product and any future development will focus on using rejected water in this manner.

A further reduction in steam requirement could be obtained if the steam for the coagulator were supplied by flashing a quantity of water at 148°C. Discharge consents would have to be altered to allow this improvement, as additional quantities **of** silica laden water will be discharged. A reduced discharge from the on-site separator and an improvement in the efficiency of overall use of the Ohaaki resource are mitigating factors in such a proposal.

An expansion in the timber drying operation is the most likely form for future developments. Timber drying operations can achieve much higher load factors than lucerne drying, because the harvesting **of** timber **is** not seasonal in New Zealand. A growing interest in the use of pinus radiata as a high grade finishing timber is the main motivation to increase the use of geothermal energy for timber drying in the central North Island.

REFERENCES

Freeston, D.H. and van de Wydeven F. (1979). More efficient use of geothermal heat in Broadlands Lucerne Company's drying plant. ***Proc. New Zealand Geothermal Workshop (Part 2),*** University of Auckland, New Zealand. November. pp.315-325.

Lienau, P (1990). Industrial Applications. ***Small Geothermal Resources - A guide to development and utilisation.*** M.H. Dickson and M Fanelli (Editors). UNITAR/UNDP, Rome. pp. 171-202.

Mujumdar, A.S. (1987). ***Handbook of industrial drying.*** Marcel Dekker Inc., New York.