DATA LOGGING AND ON-LINE ANALYSIS OF FLOW RATE MEASUREMENTS ON A STEAM GATHERING NETWORK

Renato Papale[1], Sergio Rogai[2]

[1] ENEL S.p.A. DPT/VDT/G, Via Andrea Pisano 120, 56122 Pisa (Italy)
[2] ENEL S.p.A. DPTNDTSISTT, Via A. Depretis 45A, 00184 Roma (Italy)

Key words: flow-rate measurement, real-time data** logging, **coeval measurement, radio collection

ABSTRACT

A system for historical data acquisition and on-line analysis of the measurements of temperature, pressure and flow rate is presented.
The system collects information from about eighty measurement points including all the wellheads and the power plant inlets connected to the Larderello steam gathering nework.
A description of the instrumentation and the radio polling method utilized as well as the software package for the storage, analysis and presentation of the historical data are described.
Evaluations of the operation of the systemwill also be presented.

1. INTRODUCTION

Historical production data for each geothermal well connected to production plants has traditionally been carried out periodically by ENEL personnel.
The steam properties measured include temperature, pressure and gas concentration. The flow rate is calculated from orifice plate differential pressure measurements (generally with D and D/2 taps).
Practically all the measurements are measured at the individual wellheads by means of portable instrumentation connected to taps permanently installed on the pipeline. Because of the high number of measurement points, this methodology requires a large personnel commitment, and also permits a low acquisition rate, usually monthly.

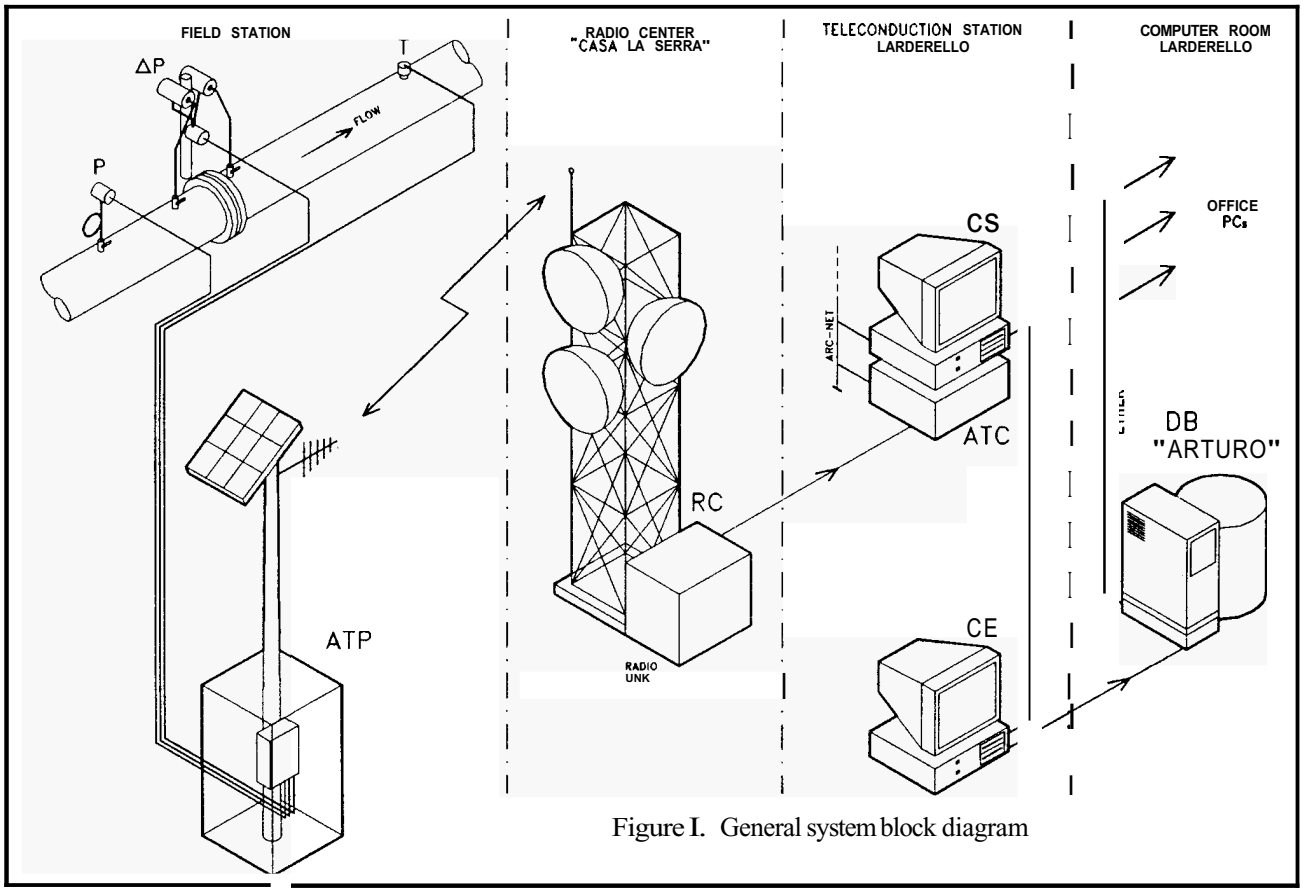

Figure I. General system block diagram

Any observation of transitory phenomena is impossible due to acquisition rate; furthermore, the non-contemporaneity of the data (acquired in a matter of days) does not permit any analysis of the efficiency of the network.

With the implementation of the "Larderello Renewal Project" (consisting of the installation of power plants and steam gathering networks in the "Area Boracifera" central basin, in order to maximize the efficiency), the necessity of an acquisition system was apparent. The continuous gathering of data to obtain the necessary information for the best field management was required.

The system is based on instrumentation permanently installed on the steam network corresponding to the primary measurement elements present on each productive well, on each plant inlet and steam outlet point for non-electric utilizations (chemical plants).

The system is composed of the following parts:

1 Peripheral measurement stations equipped with permanently connected instrumentations
2 Apparatus for data acquisition, including a solar cell power supply and modem and transmitter-receiver radios
3 Inquiry radio center of peripheral stations
4 Central Station for data acquisition and collection
5 Real-time data processing system for the information organization and to update the central data-bank, accessed from PC workstations

Acquisition mamagement is controlled by the Central station which (on a programmable schedule and using broadcasting mode) sends to the peripheral stations a command that forces in the same time all of them to sample-and-hold the instantaneuos measurements and, then, grants access from one periferal station at a time to the previously sampled data.

This modality assures measurement coevality using only one radio-channel.

In Figure 1 the block diagram of the whole system is shown. A more detailed description of the individual elements follows.

2. TELEMETERING NETWORK

In Figure 2, the steam gathering network extension for the "Larderello Renewal Project" is shown in a scale drawing.

The figure shows all the sites of interest to this project.

The Teleconduction Station (PT) contains all the process computers for geothermal plant remote control. The data processing center computers for this project were also installed next to this.

Each location's orifice plate in the line was calculated to assure a differential pressure which is the best compromise between the minimization of producible energy losses and measurement errors for all expected flow conditions.

The minimization of energy losses was most critical since the geothermal resource productive efficiency maximization is the main purpose of the "Larderello Renewal Project".

The predicted minimum value for the differential pressure was determined to be 1000 Pa.

This value still allows satisfactory measurement due to the high precision of the instruments used.

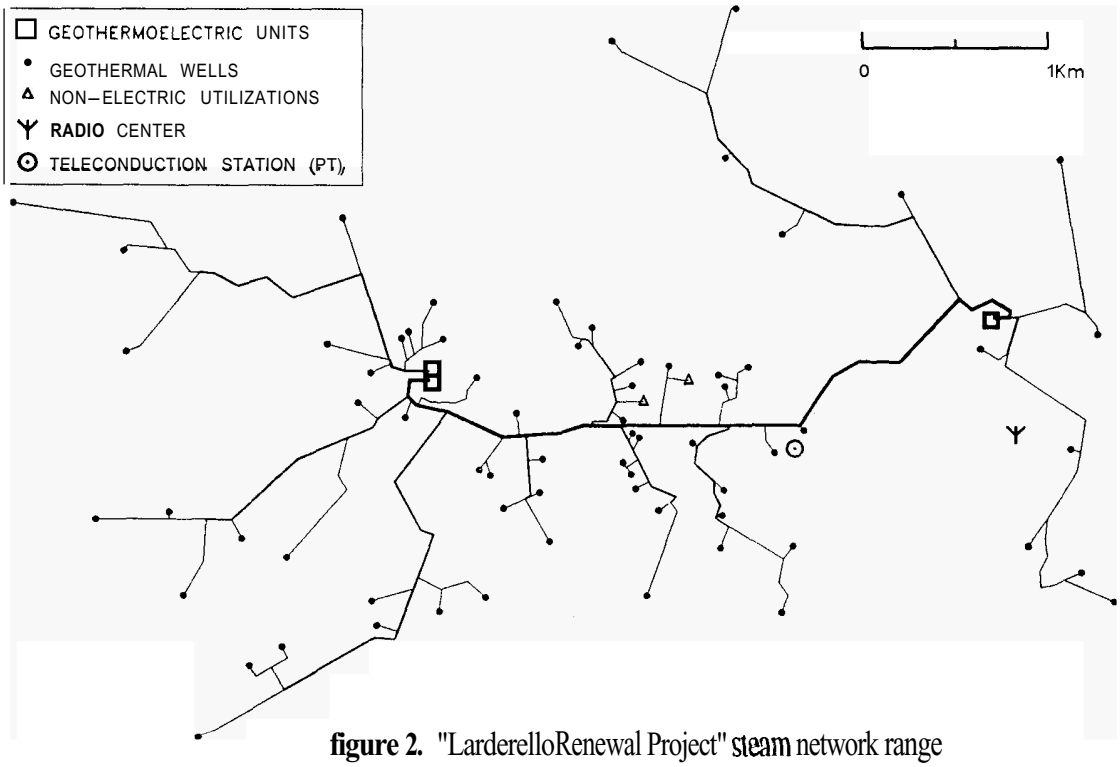

figure 2. "LarderelloRenewal Project" steam network range

In Figure 3 the mechanical assembly of the pressure differential meters is shown, in relation to the position of its seal pots.
This configuration has been judged as being the optimum for the continuous measurement of steam in the presence of noncondensable gases.
Table 1 to Table 3 contain the specifications for all equipment utilized.

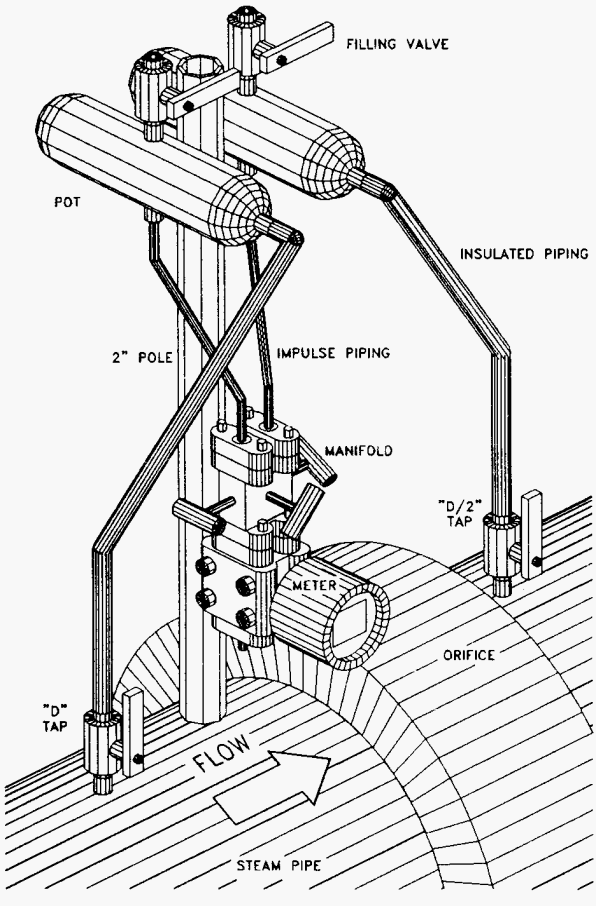

Figure 3. Seal pots assembly

3. DATA ACQUISITION STATIONS

As previously mentioned, to obtain coeval values of the acquired measurements, value holding remote controls with programmable sample intervals were selected.

Table I. Temperature Sensors

Sensor:	**termoresistance PT100**
Insert diameter:	**6 mm**
Divind length:	**200 mm**
Head protection:	**IP65**
Transmitter output:	**4 - 20 mA**
Measurement Range:	**100 - 300 °C**
Precision Class:	**0.25 %**

Table 2. Absolute Pressure Sensors

Sensor:	**capacitive**
Membrane:	**Hastelloy C276**
Cell filling:	**silicone oil**
PN:	**9 MPa**
Working temperature:	**-40 - +85 °C**
Protection:	**IP67 DIN40050**
Transmitter output:	**4 - 20 mA**
Measurement Range:	**1 MPa**
Precision Class:	**0.1 %**

Table 3. Differential Pressure Sensors

Sensor:	**capacitive**
Membrane:	**Hastelloy C276**
Cell filling:	**silicone oil**
unilateral overpressure PN:	**3.2 MPa**
Working temperature:	**-40 - +85 °C**
Protection:	**IP67 DIN40050**
Transmitter output:	**4 - 2 o m A**
Measurement Range:	**1.5 - 18 kPa**
Precision Class:	**0.1 %**

A minimum power supply was also required to mantein a steady state in periferal stations. Each acquisition station is composed of the control cards (ATP) with integrated modem, the radio and the solar cell supply equipment (panel, regulator, battery, and support pole with panel and antenna).
Each station is enclosed at a location near the measurement site.

3.1 Powering and infrastructures

The equipment utilized operates on a maximum of 6 Watts of power. The transducers are included in this value since continuous monitoring is necessary. It was therefore possible to use a solar cell system equipped with a panel surface of about one square meter due to the low power requirements. The transmission pole at the site is loaded with the solar panel, yagi antenna, and waterproof shells (IP55). The shells contain a load regulator, telecommunication equipment and a radio.

3.2 Acquisistion cards (ATP)

System requirements are presently limited to the acquisition of three properties: temperature, absolute and differential pressure as well as such service signaling as, for example, prealarm minimum battery voltage. The 4 - 20 mA inputs from transmitters are converted to twelve bit words transmission.
The acquisition cards contain 4 analog inputs, 4 digital inputs and 16 digital outputs each. The ATP could be equipped with up to two acquisition cards, to allow future expansion.

Such expansion could include items as motor-operated-valves for the steam ducts.
The cards are configurable remotely utilizing key command words trough a serial interface.
A HDLC protocol is used for the communication between ATP and the central acquisition station (ATC).

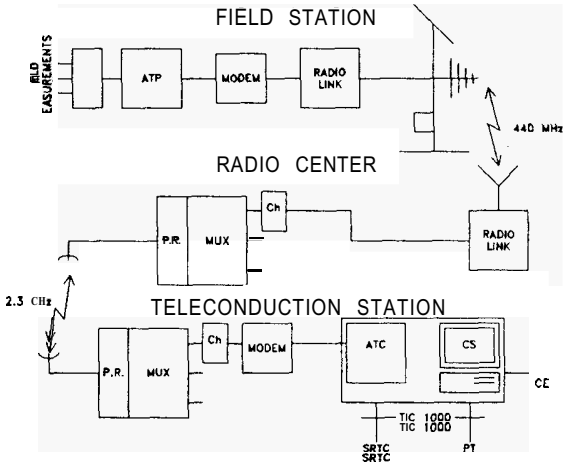

Figure 4. Teletransmission block diagram

3.3 Modem and radio

Data exchange is performed at the rate of 1200 bits/sec by a modem integrated in the ATP. The radio links operate at the frequency range of 440 MHz.
The radio of each peripheral station radio can transmit from a minimum of *500* mW to a maximum of 4 **W.** The minimum power was selected to .

4. THE RADIO CENTER

The radio center is located on the hillock of Casa la Serra (see **fig.** 2) with the radio station used for peripheral polling. An omnidirectional (dipole) antenna was used to guarantee a nearly circular covering of the area. The power supply is provided by an *UPS* at 24 V_{DC}; the power at radiofrequency was limited to **4** W, in order to avoid long-distance radio interference. Thanks to the long sampling time intervals and to the halfduplex functioning modalities, only one radiofrequency for the entire system was used.
ATP polling **is** driven by the ATC, according to a programmable polling schedule.

5. ACQUISITION CENTER

The central acquisition station (ATC) is located at the Larderello Teleconduction Station and is connected with a radio link of 2.3 Ghz to the radio center nearby.

5.1 Data acquisition central station

The data acquisition center is made up of a central **station (ATC) and a** *Supervisory Center* (CS) **composed of** an industrial Personal Computer interfaced by an asynchronous serial line to the external contuguous process computer (CE, see **fig.** 1); flow control (DC1/DC3) is supported.
The ATC is operated by a ARCNET network connected to the CS personal computer capable of integrating up **to** 254 ATC's on the same network. Each ATC in turn can manage up to 500 ATP.
The ATC is interconnected with the supervisory system of the telecommunication network (SRTC) and is **Seen** as a peripheral telecontrol **by** the Teleconduction Station. The ATC can operate with a programmable transmission speed between 50 and **600** baud.

5.2 Cyclic acquisition function

Upon a request from the ATC, each ATP stores a snapshot value of all programmed inputs; then transmits these values to the ATC when requested.
The acquired measures are stored by the CS in a mass storage, according to the required format.
Up to one month's data may be stored in a circolar buffer way.

5.3 Diagnosis

Diagnostic information for remote controls and telecommunication equipment is available for transmission to the supervisory system of the teletransmission network (SRTC).

5.4 Man-Machine Interface

On the CS PC, User Interface Programs have been implemented that allow **to** schedule the polling sequence, to put **out** of the scan list an individual ATP and to print a report on the plant situation.
Through video pages, the configurations of communication messages can be programmed. Remote setting of working parameters of each ATP **is** also allowed.

6. ELABORATION CENTER

The functions carried **out** by the Elaboration Center (CE) include the following:

- CS communication management;
- conversion **of** "unprocessed" data in engineering units
- temporary local data-base
- management of a local data-base of the *nonvariant* (pipeline and primary elements dimensions, ...) and ***variable*** (thermodynamic and chemical-physical parameters of the geothermal fluid) measurement points;
- flow-rate calculation on the basis of **measured** values.
- management of the connection with the Host computer for central data-base information transfer.

The CE **is** composed of an industrial PC equipped with a screen saver and redundant disk systems, to improve **its** reliability.
The CE feeds in real time data to the central data-base

for ENEL called *"ARTURO"*. The data-base contains all technical and scientific information related to ENEL geothermal activities. Inquiry of instantaneous information collected by the system is possible from any qualified network PC linked to LAN, by means of programs developped in MS.Windows™ environment. Figure **5** shows an example of one of these program reports.
A software model of the steam gathering network is under development which, if implemented on the CE, will also check instantaneous acquired data and provide the operators with real-time information concerning network efficiency.

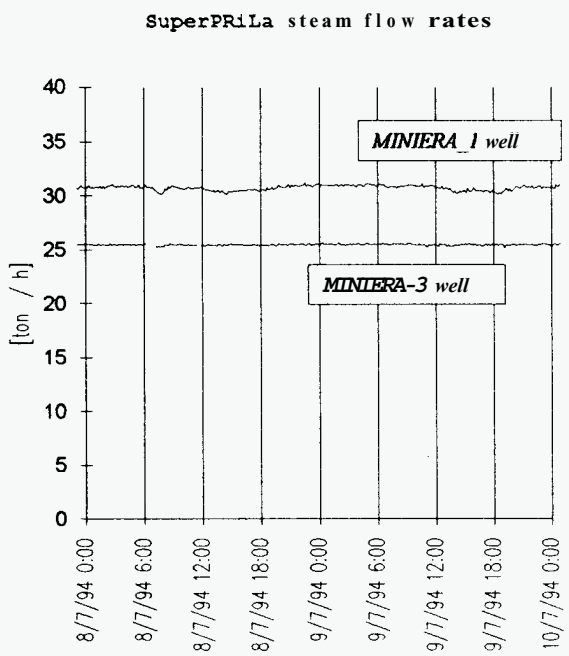

Figure **5.** An output program report

7. EVALUATIONS

7.1 Performance evaluation

The current setting for acquisition is an hourly sample but the system would be capable of acquisition up to ten minutes. This would eventually allow the monitoring of transitory events in geothermal units located on the same network.
System precision (and the eventual drift of the secondary equipment) is obtained through periodical measurements of temperature, pressure and flow, taken by the personnel in the same sites with the usual technologies. Periodic test and calibration of the sensors, which can be carried out statistically, will be done under a program that will be defined after the first year of operation.
In case of anomalies or drifts, the equipment used allows a fast recalibration and resetting of each measurement point, through a portable terminal.

Accuracy of the flow-rate data at the end of the measurement, transmission and calculuation chain is generally better than 2% with resolution equal to 3%. These values are positive for such a system, optimal for the evaluation of field exploitation and network efficiency, and acceptable even for invoicinging of the steam yielded for non-electric utilizations.
Regarding the maintenance, the system is extremely reliable, both for the quality of individual components that have an high MTBF, as for the low MTTR due to the rapid assistance and repair allowed by the extremely modular architecture and its autodiagnostic function.

7.2 Economic evaluations

Radio transmission provided a more reasonable choice compared to electric cable or to fiber optic lines.
The installation of electric cables on the entire steam network is economically unfeasible. If it is installed on the pipelines (cheaper than aerial or underground lines) the cable becomes a nuisance during any maintenance on the gathering system. The cable is also susceptible to damage from vandals or accidents since the plants are located in populated areas.
The fiber optic alternative is roughly identical in cost to electric cable but the restrictive regulations due to the prosimity to pressure pipelines are less severe. The problem is that the cable does not allow power transmission in addition to the signals.
Compared to the alternatives described above, transmission via radio link proved to be most effective.
Table **4** shows the costs for equipment and installation.

Table 4. Realization costs(*)

EQUIPMENT:	2,600
Installation / Calibration:	480
Periph. Infrastructures:	3,200
ATP:	1,870
each peripheral	8,150
total peripherals (75x)	611,250
ATC + CS (hw & sw):	14,350
CE (hw, sw & db):	26,500
total	652,100
Radio Center Infrastr.:	(preexistent)
Radio Channel (each year):	4,700

(*) in US$ year'93

7.3 Expansibility to other steam networks

The system described was implemented in the summer of 1994 for both acquisition and supervision of steam gathering network in the central field of Larderello. The field includes 70 producton wells, 3 geothermoelectric units and 2 chemical plants with steam utilizations.
Extension to other steam gathering networks is foreseen after a performance evaluation period. The identical

system can be implemented in other geothermal areas including Monte Amiata, Travale-Radicondoli and Latera. Many ATC's can be interconnected with each other in local networks to provide easy expansion with only one central system.

7.4 Applicability of the telemeasure system

Many applications exist for the system described; expecially systems where only a low acquisition rate is required.
All centralized systems for the collection of information as, for example, air quality, metereologic measures, or any related with environmental control quantities are possible applications.
For instance, with the same tecnology a centralized telemetered systems operating in real time for environmental impact control of geothermal plants can be implemented, in substitution of current local recording systems. It is expecially required due to the large geographical distribution of the plants.

8. CONCLUSION

The implemented system met all espectations for performances, acquisition times and costs. At the end of a trial period, it will be extended to other geothermal basins in order to monitor information concerning endogenetic fluid for all the production wells and steam-ducts.
Radio collection methodology based on polling proved simple and adaptive.

9. ACKNOWLEDGEMENTS

The authors thanks goes to all their colleagues, who took part to the project development, and the operative personnel at Larderello, whose contribution to the resolution of the problems that emerged during the realization has been decisive in determining the success of such a technically complicated and vast system.