MULTIPLE USE OF GEOTHERMAL ENERGY AT KIRISHIMA INTERNATIONAL HOTEL

Saburo Ohkubo[1] Yuri Esaki[2]

[1] Kirishima International Hotel [2] Fuji Electric Co., Ltd.

Key words: direct uses, multiple use, hotel, Japan

Abstract

The Kirishima International Hotel is unique in the use of geothermal energy to supply a wide variety of its energy needs besides the hot **spa** bathing which is the basic function of this resort hotel. Steam from hot spa wells on the hotel premises has been used for space heating/cooling, hot water supply and pooer genereation successfully for more than ten years. In this paper, the details of the system and the factors which are considered to be the keys to the success are presented.

1. INTRODUCTION

The hotel is located on the southern end of Kirishima region of Kirishima-Yaku National Park in South Kyushu as shown in Figure **1.** Driving time from Kagoshima Airport is about **30** minutes. The hotel uses steam from hot spa wells for all of its energy use including bathing. space heating and cooling. hot water supply and power generation. Figure 2 shows a view **of** the hotel. Exhaust from the 100kW geothermal power plant is seen in the left background. Figure **3** is the plan of the hotel. The hotel occupies 27,782m² of land and the total building area is 23,840m². The hotel was opened in September 1971 and receives about 160,000 tourists per year.

The facilities include **204** guest rooms. **12** banquet rooms, **4** conference rooms, **2** big indoor baths, 2 outdoor baths and other facilities such as restaurants and **shops.**

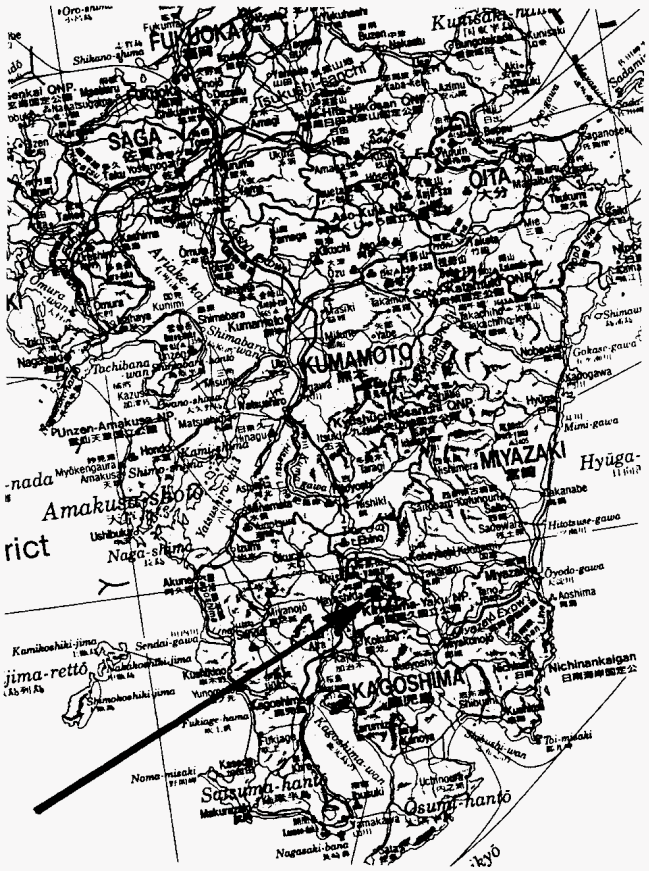

Figure 1 **Location** of Kirishima

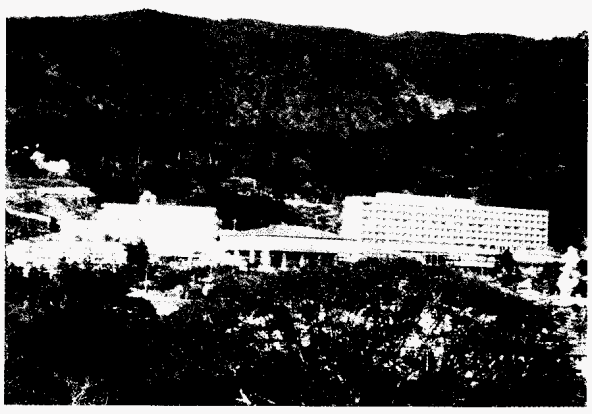

Figure 2 Kirishima International Hotel

2 TOTAL SYSTEM

Figure 4 shows a diagram of the total system which utilizes steam from the hot spa wells. There are four wells which range from 70 to 400m in depth. Wellhead temperature and pressure range 128 - 151deg.C. and 2.45 - 4.9bara. Total production is 12t/h of steam and 1t/h of hot water. The bore diameter of each well is 65mm.

A part of the steam from Well #1 and steam from Well #2 is admitted to the separator (1) and the steam is used to generate power with a 100kW back pressure unit (2). Hot water from the separator is used for outdoor bathing (5) through the storage tank (3) and the preparation tank (4) to adjust the temperature. The rest of the steam from Well #1 and a part of the steam from Well #8 are combined and is used for space heating/cooling (7)(8), hot water supply (9)(10) and heating of sauna bath (11) through the distribution tank (6). The rest of steam from Well #8 is injected into water to make up hot spring water (12) and is mixed with water from heat

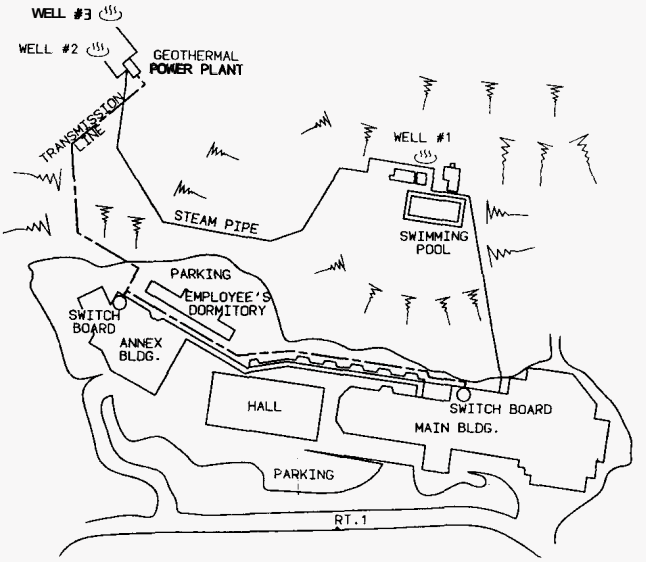

Figure 3 Plan of the Hotel

exchangers at the preparation tank (13) to supply two big indoor baths (14).

For three years from 1990 thru 1992, the demonstration test of the 200kW condensing unit and the 300kW back pressure unit had been carried out at this hotel as the final stage of NEDO sponsored project to promote small size geothermal power generation. During those three years, the 100kW unit had been temporarily shut down because of the

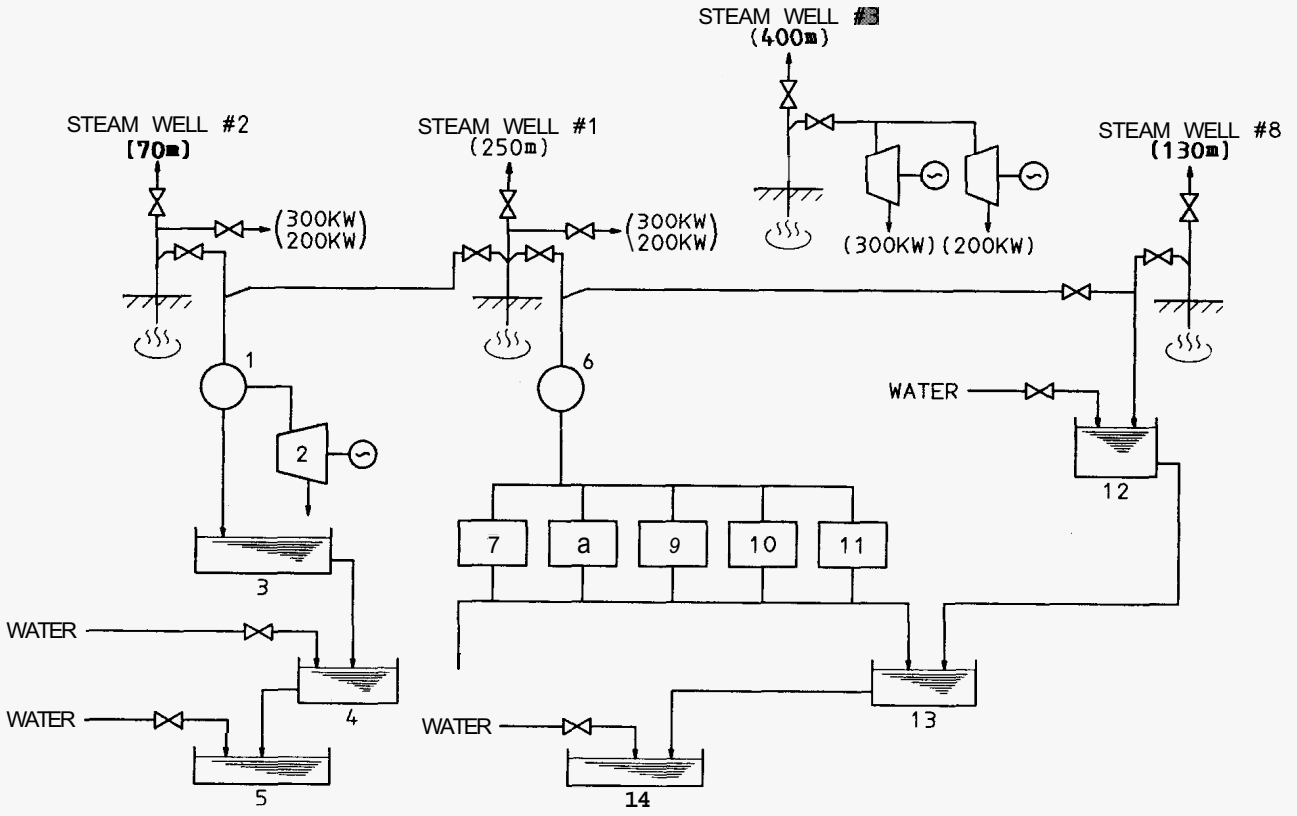

Figure 4 Flow Sheet of Geothermal Steam and Hot Water

shortage of steam.

2.1 Bathing

Hot water is supplied to two big baths (total area : 758m²) and two outdoor bath . (total area : 177m²) In the make-up tank (12), geothermal steam of about 150deg.C. is injected into clean water to produce hot water of about 50deg.C.

2.2 Space Heating & Hot Water Supply

(8), (9) & (10) in Figure 4 are plate type heat exchangers for these purposes. The heat transfer area of the heat exchangers is 39.6m²for space heating and 29.1m² for hot water supply. A separate heat exchanger (10) is provided to make hot water for drinking and cooking. Plate type heat exchanger can be easily adjusted by adding or removing the plate when the actual heat load differs from the planned load.

2.3 Space Cooling

Originally two turbo-refrigerators of 300RT and 120RT were installed. In 1983 a 200RT absorption type refrigerator (7) which uses geothermal heat was installed and the 300RT refrigerator was dismantled. The 120RT unit still remains as a emergency unit in case of trouble with the steam well. The 200RT absorption type refrigerator consumes only 2kl for its pumps compared to 265kW for the 300RT turbo-refrigerator. which is a considerable power saving to the hotel. The tubes of the Li-Br regenerator where geothermal steam flows were made of titanium.

2.4 Power Generation

In October 1983 a 100kW back pressure unit (2) was installed in the backyard of the hotel to supply a part of the power the hotel uses. In the planning stage a condensing type turbine was also considered.

Although the gross output would be about 240kW with the condensing type with the same steam flow. the increase in the net output would be only 50kl because of the increase of the parasitic loads such as pumps and fans. The simplicity of maintenance work was also taken into account in the decision for the back pressure unit. The electricity from the unit is used for the base load in the hotel such as sewage water treatment, lighting in the hallway and the lounge, kitchen refrigerators. and provides 30 to 60% of the hotel load according to the season and the time of the day. Figure 5 and 6 are outer views of the power house and the steam turbine generator. In the first year of operation the unit had to be



Figure 5 Outer View of the Power House

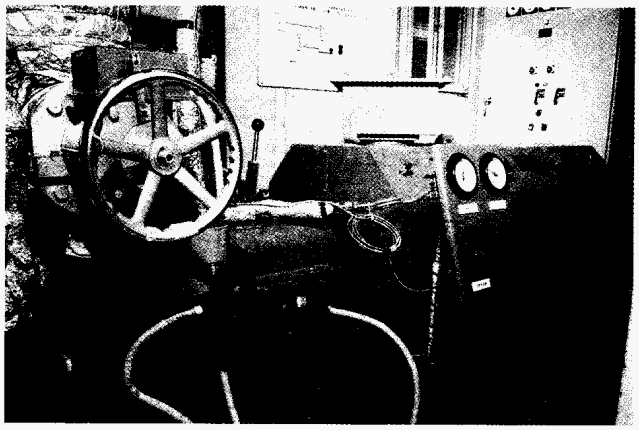

Figure 6 100kW SteamTurbine Generator

shut down frequently due to heavy precipitation of silica. After the cyclon separator was installed, the unit maintains a high availability factor as shown in Table 1.
Specifications of the unit are as follows.

Steam Turbine:
Type Single stage impulse packaged type
Rated Output 100kW
Inlet Steam Pressure 2.45bara
Temperature 126.8deg.C.
Noncondensible Gas Contents 0.06%(wt)
Exhaust Pressure 1.18bara
Steam Flow 6t/h
Speed 3600 rpm

Generator:
Type Air-cooled synchronous, brushless excitation
Capacity 125kVA
Voltage 400V
Power Factor 0.8
Speed 3600rpm

3. EFFECTS OF USE OF GEOTHERMAL ENERGY

Table 2 shows the savings of fuels and electricity. The total saving by using geothermal energy is about 24 million yen per year after deduction of the system maintenance cost. The installation cost of the 100kW power generation unit was written off in the first 4 years.

Table 1 Operational Record of the 100kW Geothermal Power Plant

Year (Apr.1-Mar.31)	Hours Optd. (h)	Power Generation (MWH)	Availability Factor (%)	Capacity Factor(%)
1984	902	42	10.4	4.7
1985	8,431	581	96.7	66.3
1986	8,210	627	95.0	71.6
1987	8,760	683	100	78.0
1988	8,784	683	100	77.8
1989	8,612	699	98.6	79.8
*1990-92	0	0	NA	0
1993	8,727	343	99.6	39.2
1994(Jul.31)	2.928	181	100	61.8
TOTAL	55,354	3,839		

* The unit had been shut down because steam is diverted to the demonstration test of the 200kW and 300kW units sponsored by NEDO.

Table 2 Savings of Oil and Electricity

Facilities	Commencement of Service	Savings/Year Heavy Oil(kl)	Electricity(MWH)
Hot Water Supply	Oct. 74	194	2.92
space Heating	Oct. 74	80	8.7
Hot Water Supply (for drinking)	Nov. 76	4.2t(LPG)	
space Cooling	Jun. 83		244
Power Generation	Feb. 84		680
TOTAL		274 + 4.2t(LPG)	935.62

Besides the economical effect of the use of geothermal energy. there are additional benefits as listed below.

a) Since the boiler is no longer in use. there is no emission of smoke into the air, and there is no risk of fire from storaged fuel. A licenced boilerman is also not needed.

b) Gas later heaters which used to be installed in many service stations in the hotel are all removed eliminating the risk of propane gas leakage. Hot water is available instantaneously anytime since geothermal steam is fed 24 hours per day through the heat exchangers.

c) Noise level of the absorption type refrigerator is lower than the turbo-refrigerator.

d) Interruption of utility power has little affects on the hotel service.

4. CONCLUSION

Although geothermal energy is not transportable like fossile or nuclear energy is. and therefore is basically local energy, it can support the majority of energy consumption in the area where geothermal resources exist and can contribute to saving fossile fuels and to keeping the environment clean as shown above.

There are about 22.400 production wells in 2.360 hot spas in Japan according to the statistics published by the Japanese Environmental Protection Agency. Currently the installed capacity of the direct use of geothermal resources is 180MWt, and assuming the average capacity factor of these installations is 59%. it replaces only 0.06% of oil consumption in Japan. There is a high possibility of increasing the use of geothemal energy (direct or combined with power generation) if it can fulfill certain conditions.

One important key to success is. since the majority of running cost of geothermal facilities is not fuel cost but the fee of depreciation. not to make the capacity in excess of the base load.

It is economically more feasible to buy utility power to cover daily or seasonal peak load rather than install a bigger power generation unit of which the capacity factor would be lower. High thermal loads during the winter also can be covered by kerosene boiler.

The drilling of wells is a costly part of geothermal facilities. In a small or medium size application, the practical use of existing wells is also important to achieve economical success.

For a conventional system which burns fossil fuel the system efficiency is important. However. the reliability of the system should be pursued to the utmost for a geothermal system in its engineering rather than sticking to high efficiency and sophisticated controls.

Hot spa steam keeps fuming anyway while the facility is down by mechanical or electrical trouble. It is more important to achieve higher capacity and availability factors.