SLIMHOLE DRILLING FOR GEOTHERMAL EXPLORATION

John T. Finger, Ronald D. Jacobson, Charles E. Hickox, Roger R. Eaton
Sandia National Laboratories, Albuquerque, NM, 87185-1033, USA

KEY WORDS: geothermal, exploration, slimhole, core drilling, testing, simulation

ABSTRACT

Sandia National Laboratories manages the US Department of Energy (DOE) program for slimhole drilling. The principal objective of this program is to expand proven geothermal reserves through increased exploration, made possible by lower-cost slimhole drilling. For this to be accepted as a valid exploration method, however, it is necessary to demonstrate that slimholes yield enough data to evaluate a geothermal reservoir, and that is the focus of Sandia's current research.

This paper describes the drilling, logging, and flow testing of an exploratory slimhole in the Steamboat Hills geothermal field near Reno, Nevada, USA.

BACKGROUND

Although a vast majority of drilling technology used in the geothermal industry is derived from oil and gas practice, geothermal requirements are qualitatively different. There are hard, abrasive, and fractured rocks; high temperatures; and underpressured formations, frequently containing corrosive fluids. All these factors create a more rigorous environment than normally found in oil and gas drilling, and increase drilling cost by a factor of two to five. The service and drilling tool industries have little incentive to address these problems, since the number of geothermal wells drilled in a year is about 0.1% of the corresponding number for oil and gas. This lack of commercial R&D is the primary rationale for DOE's support of technology development.

Drilling costs associated with exploration and reservoir assessment are a major factor affecting future geothermal development. The geothermal industry (utilities and operators) needs to reduce these costs to be competitive in meeting expanding requirements in the western United States for environmentally benign, alternative energy sources. Slimhole drilling has been shown to reduce oil and gas exploration costs by 25 to 75%, but the more hostile conditions for geothermal resources present technology challenges which must be solved before the cost impact there can be thoroughly evaluated (Combs and Dunn, 1992.) Once accepted, slimhole drilling technology will have application to geothermal exploration and reservoir assessment in both the U. S. and international markets.

RECENT ACTIVITIES

Sandia's investigation of slimhole exploration began with in-house analysis, field experiments on existing geothermal coreholes, and collection of an extensive data set from comparable drilling in Japan (collection and analysis of the Japanese data is an ongoing activity.) We then negotiated an agreement with Far West Capital, which operates the Steamboat Hills geothermal field, to drill and test an exploratory slimhole on their lease. Steamboat Hills geothermal area is located about 14 km south of Reno, Nevada, and currently supports two power plants with a rated total output of approximately 36 MWe. Production zones for the power-plant wells are typically shallow (less than 300 m); of moderate temperature (~160°C); characterized by large, steeply dipping, well-connected fractures in granodiorite; and extremely permeable - test data indicate values of transmissivity exceeding 300 da-m. Wells previously drilled here showed temperature reversals, and the exploratory slimhole had a maximum temperature of 164°C at approximately 150 m, with a temperature decrease to 150°C at total depth of 1220 m. A nearby power plant on another lease, however, draws from a reservoir at approximately 215°C, indicating that a hotter resource might lie beneath the one currently produced for the Far West power plants. Extensive previous development in this field meant that drilling conditions were reasonably well-known, but because most of the existing welts are shallow, there was an opportunity for slimhole exploration in search of a deeper, hotter reservoir.

The exploratory well (number SNLG 87-29) was specifically designed (see Figure 1) for extensive production

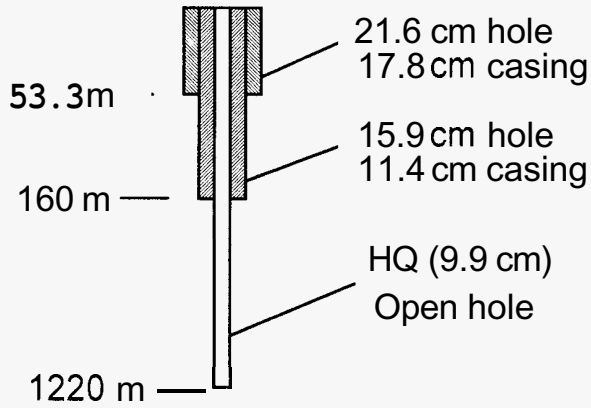

Figure 1 - Well design for SNLG 87-29

and injection tests so that those results could be compared with production and injection data from existing wells in this developed field. In fact, the exploratory well was drilled approximately 10 m from an existing, but unused, production well. The principal objectives for the slimhole were development of slimhole testing methods, comparison of slimhole data with that from adjacent production-size wells, and definition of possible higher-temperature production zones lying deeper than the existing wells.

During the project, drilling was suspended four times for a series of production/injection tests, each time taking downhole (pressure, temperature, spinner) and surface (wellhead pressure and temperature, James tube lip pressure, flow rate) data. These test series were done at well depths of 295, 460, 893, and 1220 m. In general, the surface data, including a comparison of different flow rate measurement techniques, were consistent and repeatable. Downhole data were more difficult to compare because of some malfunctions in the logging tools and because the two logging service companies used different tools and different calibrations, but most of the ambiguities in the downhole data have been resolved.

TEST RESULTS

The results discussed below are based on data from the first series of tests, conducted during August *5-6,* 1993, at a total well depth of 295 m. A large fracture system at 248 m was verified by spinner measurements to be the primary production zone for this series of tests and was observed after completion of drilling to be the major feed zone for the 1220 m well. Hence, the flow and injection tests conducted during this first series are representative of the performance observed in subsequent tests when the well was deeper.

Flow **testing:** In Figures 2, 3, and 4 the temperature, pressure, and spinner response are plotted versus depth. These measurements were made at a total (liquid plus vapor) production rate of 7.1 kg/s. The liquid water flow rate was 6.1 kg/s at 89°C. Numerical flow simulations are included in Figures 2 and 3 for comparison and are discussed later. The spinner response, which clearly shows a feed zone at 248 m, is proportional to the rotational speed of the impeller, but it was not calibrated as a quantitative measure of relative flow velocity.

Wellhead pressures, measured during production for all test series, are plotted versus total mass flow rate in Figure *5.* Unsteadiness of the two-phase flow in the James tube and flash tank created significant scatter in the measurements of James tube lip pressure, flow rate, and wellhead pressure. Nevertheless, the data in Figure *5* are typical of two-phase flow from a liquid-dominated geothermal well.

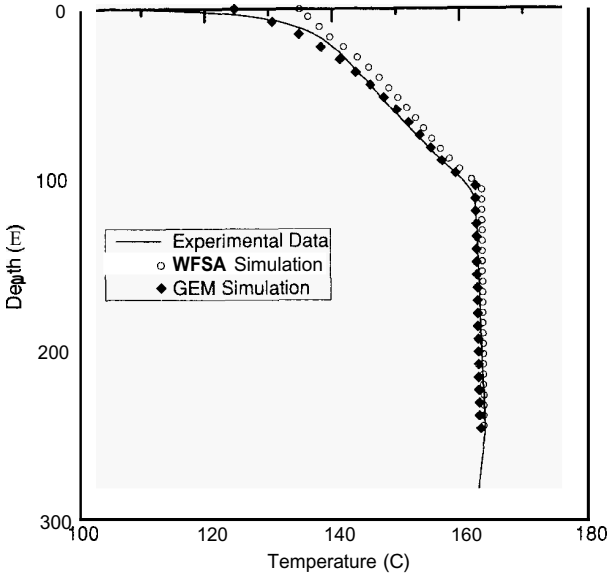

Figure 2. Downhole temperature versus depth; field data and numerical simulation. Production rate 7.1 kg/s.

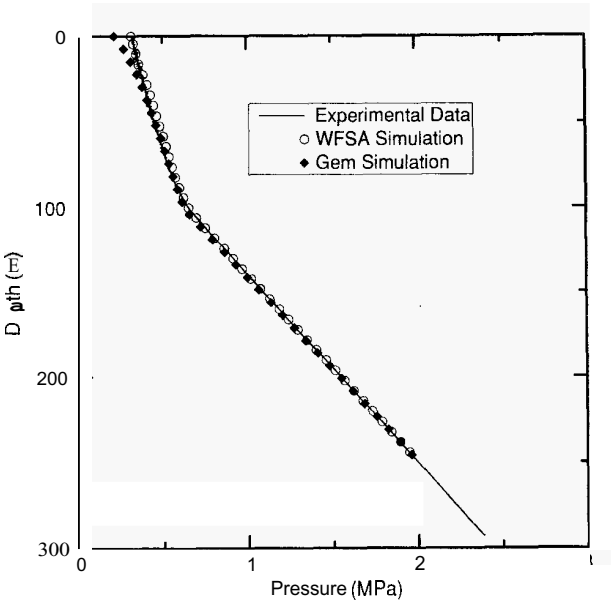

Figure 3. Downhole pressure versus depth; field data and numerical simulation. Production rate 7.1 kg/s.

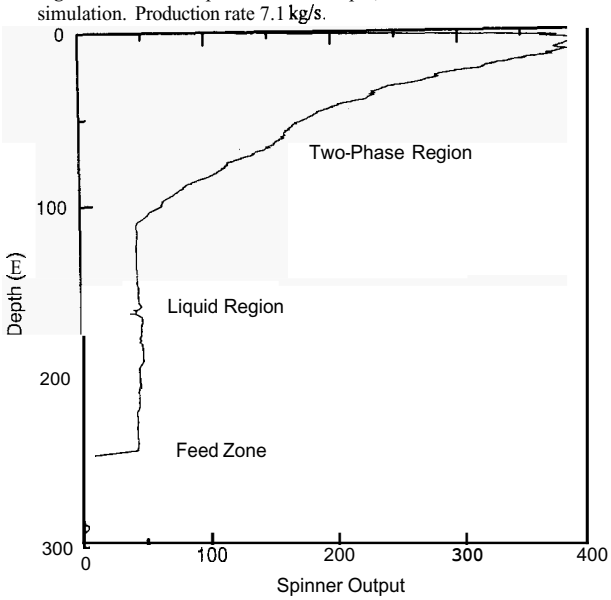

Figure 4. Spinner response versus depth while flowing 7.1 kg/s.

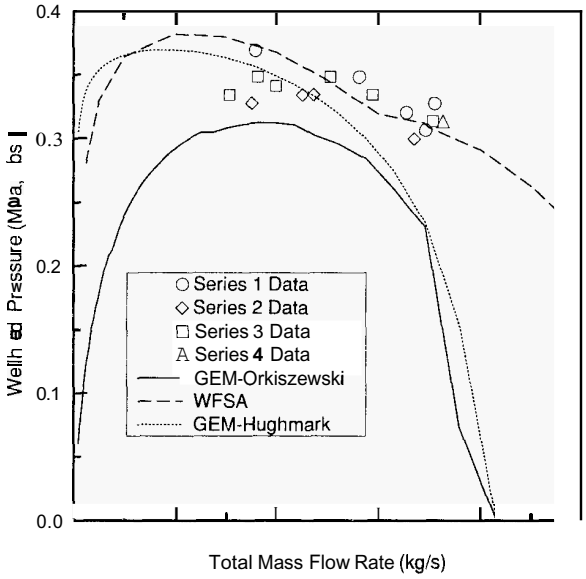

Figure 5. Wellhead pressure versus mass flow rate; field data and numerical simulation.

A secondary objective of flow testing was evaluation of the James tube method for measuring the total flow rate and heat rate of the well. The advantage of this method for slimhole application is that only simple measurements - the James tube flow area, the water flow rate (measured with a weir box), and the lip pressure in the James tube - will yield total mass flow rate and flow enthalpy. thus simplifying evaluation of those performance criteria. Although there was considerable scatter in the James tube pressure data for these tests, flow rate calculations were in agreement with the measured flow rates. The flow rate and enthalpy calculations, using James tubes of various diameters, were done according to the procedure described by Grant. (Grant, *et al,* **1982)** For those cases when we could not attain critical flow in the James tube, total fluid enthalpy was estimated from downhole temperature measurements. Knowing total enthalpy, the steam-flash fraction could then be calculated from the enthalpy of the flashed water in the weir box and the latent heat of vaporization at the local atmospheric pressure, with total mass flow rate following from this.

Reservoir transmissivity: The fracture system at **248** m has such large apparent permeability that only very small pressure increases were observed when relatively large volumes of water were injected. Difficulties with downhole instrumentation and with the injection equipment precluded an accurate estimate of reservoir transmissivity based on these injection tests, but we can estimate some reservoir properties by considering the downhole pressure response during flow rate changes in production tests (Hadgu *et al.*, **1993.)** During the first series of flow tests, veiy small, abrupt, changes in downhole pressure were observed when the flow rate was varied in relatively small increments. For flow rate changes between 0.4 and 1.0 kg/s, pressure changes ranged from 338 to **470** Pa. If we assume steady-state conditions, the apparent effective transmissivity, or permeability-depth product kh, can be estimated from the Dupuit, or Theim, formula (de Marsily, **1986.)**

$$\Delta p = \frac{\mu \Delta Q}{2\pi kh} \ln \frac{r_o}{r_w}, \qquad (1)$$

where Δp is the pressure change, μ is the fluid viscosity, ΔQ is the change in volumetric flow rate. r_w is the well radius, and r_O is the outer radius of the reservoir. *An* arbitrary value of 100 m is selected for the outer radius, recognizing that the logarithmic term makes the Dupuit formula relatively insensitive to this parameter. Using the fluid Viscosity evaluated at downhole conditions, the transmissivity is then estimated to lie in the range **160-600** da-m, with an average value of approximately **400** da-m. This estimated average value of transmissivity indicates a pressure increase of only **3.4** kPa for an increment of **6.1** kg/s in the injection rate of liquid water.

A shut-in test was also performed immediately following a **7.1** kg/s production test, and this produced a pressure change of **1.3** kPa Based on the Dupuit formula, this latter pressure rise indicates a transmissivity in the range of 900 da-m. Conventional practice for a shut-in test after production, assuming that a significant pressure rise can be observed over an extended period, is to use the Theis equation (*ibid.*) for analysis of this transient flow. For a sufficiently large time following shut-in, the Theis equation can be expressed as,

$$\Delta p = \left(\frac{2.3}{4\pi}\right)\left(\frac{Q\mu}{kh}\right)\log\left(\frac{t_s + \Delta t}{\Delta t}\right) \qquad (2)$$

where t_S is the total time of the flow test and *A!* is the elapsed time since shut-in. A plot of pressure versus the log-term can provide an estimate for the transmissivity kh, since all other parameters in the equation are known. This analysis could not be applied with confidence to the shut-in data, however, because the very small pressure rise described above was embedded in a generally declining pressure record. A plot of Δp versus the log-time term cannot be used to infer transmissivity when the accompanying wellbore/reservoir and intra-wellbore flows are not defined. and when there is an apparent problem with temperature-induced drift in the pressure-measurement electronics. In reservoirs with much lower apparent transmissivity, application of the Theis equation would be the preferred method to estimate reservoir properties.

It is informative to note that laminar, axisymmetric, creeping flow in a horizontal fracture is described by an equation similar to the Dupuit formula if the transmissivity is replaced with the quantity $b^3/12$, where b is the fracture aperture. Assuming flow occurs in a single fracture, and using the same numerical values used to estimate the transmissivity, the predicted fracture aperture lies in the range **1-4** mm, which is consistent with fractures observed in the core samples but much less than the apparent size of the production zone based on drilling data (drillstring dropped approximately **60** cm, without rotation, when it reached this interval.) This indicates that, although we may have penetrated a large void, a much smaller fracture can carry the amount of fluid produced. The ability of the large fracture to cany much more fluid than was actually produced, along with the simulations described below, indicate that wellbore diameter, not reservoir transmissivity, was the parameter limiting flow rate.

Analysis of spinner data: Spinner data, in some cases, can be the most informative measurement taken in a flowing well. In holes which penetrate several potential production or injection zones, it is frequently difficult to analyze internal flow in the wellbore, and good spinner data can be extremely useful in this aspect of interpretation. Interpreting spinner response is difficult, however, because the instruments are not usually calibrated to give absolute flow velocity, or even velocity relative to the tool, but instead to give a number of counts that measures how fast the impeller on the tool is rotating. In some instruments, such as those used in our tests, it is not even possible to determine flow direction relative to the tool.

There are, however, two features of the test configuration which make it possible to, in effect, calibrate the spinner after the fact: (1) the logging line speed, or tool velocity, is known in all cases, and *(2)* total mass flow rate is known and, in the casing where flow is single-phase, fluid velocity can be accurately calculated. Combination of the logging tool speed and absolute fluid velocity gives the fluid velocity relative to the logging tool, and repetition of this procedure at several flow rates produces a "calibration curve" for the spinner tool. In deriving these calibration curves, only the cases in which the relative fluid velocity was toward the bow of the spinner tool were considered; generally, we felt that the tool body shadowed the impeller when relative flow was from the tool's stem. Use of these calibration curves to analyze flow test data revealed that flow from the major

production zone at 248 m is divided, with the majority of the fluid going up the well and the remainder going down. The down-going flow rate, which varies from approximately 1.0 to 2.5 kg/s, is a very weak function of the wellhead flow rate. The down-going flow velocity was less than the logging line speed, so that the relative velocity of the fluid was toward the bow of the tool.

Simulations: Numerical simulation of flow in a wellbore is critically dependent on the correlation or .mathematical model used to describe the two-phase flow regime. Depending on well depth and temperature of the surrounding formation, representation of heat transfer between the formation and the wellbore may be equally important. We are currently investigating the computational packages described below for numerical simulation of flow in slimholes.

- GEM requires input of downhole pressure, formation-temperature profile, and wellhead pressure, and then calculates flow rate (Dykhuizen and Eaton, 1993.) It allows simulations with no slip in the two-phase region or with either of the slip models proposed by Orkiszewski (1980) and Hughmark (1962.) In GEM, heat conduction in the surrounding formation is simulated using finite differences.

- WFSA requires input of downhole pressure, formation temperature, and flow rate, and then predicts wellhead pressure. It allows for multiple feed zones and the effects of dissolved solids, is based on the work of Hadgu (1989), and uses a specially developed two-phase **flow** model. Heat transfer between the formation and the wellbore is described with an analytical model.

Both of these codes can be used to iterate a series of solutions with varying initial conditions to produce a curve of flow rate versus wellhead pressure, along with the associated predictions of downhole pressure and temperature. This predictive capability can be scaled up to a larger well in the same reservoir, if we assume that the downhole pressure remains the same. In this highly permeable situation, that assumption was valid, but in other reservoir types the pressure drawdown during production might seriously distort the predicted output. This phenomenon emphasizes the need for a coupled wellbore-reservoir simulator.

GEM and **WFSA** were used for our initial simulations of flow in the slimhole. In Figures 2 and 3, the pressure and temperature distributions **with** depth, assuming adiabatic flow, are compared with downhole measurements for the first test series (well depth is 295 m). The GEM simulations used the Orkiszewski two-phase flow model. Most of the calculations are in good agreement with the measurements, but near the surface we suspect that unmodeled heat transfer mechanisms are responsible for the difference between predictions by WFSA and observed temperature distributions. The two-phase flow correlation used in GEM apparently causes it to under-predict wellhead pressure, as shown in Figures **3** and **5,** and there is a slight variation of temperature with depth in the single-phase region, shown in Figure 2, as contrasted with the constant-temperature assumption in WFSA; otherwise, temperature and pressure distributions predicted with GEM differ little from those predicted with WFSA.

The agreement among the computational approaches and experimental data is reasonable, considering **the** variability of the measurements involved and the sensitivity of the simulations to the two-phase flow correlations employed. These comparisons should be viewed as preliminary since we are still evaluating various approaches to the simulation of wellbore flows.

Keeping all parameters except wellbore diameter fixed, GEM and WFSA were used to predict the correlation between wellhead pressure and flow rate from a full size production wellbore with diameter of 31.1 cm. For a mass flow rate of 62 kg/s (corresponding to a 1990 test of the nearby 31.1 cm production well Hot Air-4), wellhead pressures of 386, 455, and 379 kPa absolute were predicted with, respectively, WFSA, GEM(Orkiszewski), and GEM(Hughmark). Hot Air-4 (HA-4) produced 55 kg/s of liquid water (62 kg/s total mass flow) at a wellhead pressure of 500 kPa absolute. The production from well HA-4 is associated with a production zone at 222 m, which is somewhat shallower than the slimhole production zone at 248 m. However, tracer tests in the Steamboat Hills geothermal field indicate pervasive interconnections between fracture zones, so it does not seem unreasonable to expect similar production rates among nearby fracture zones. Based on a single test, simulation of a production well extrapolated from a slimhole tends to indicate a lower wellhead pressure at a specified mass flow rate than that observed experimentally. Unfortunately, only one test was done in HA-4 so further comparisons are not possible, but these results are encouraging, since the differences appear to be within a normal range of variation for the experimental measurements and the models used in the simulations.

DISCUSSION

Drilling is cheaper for slimholes than for production wells because: (1) the rigs, crews, locations, and drilling fluid requirements are all smaller; (2) site preparation and road construction in remote areas is significantly reduced, up to and including the use of helicopter-portable rigs; (3) with diamond core-drilling, at least, it isn't necessary to repair lost-circulation zones before drilling ahead; and (4) if the reservoir evaluation program calls for production or injection tests on an exploratory well, there will be much less fluid to handle than with a larger well.

As a comparison, the Steamboat Hills slimhole, including all testing and overhead, cost approximately US$492/m while the neighboring production well (31.1 cm production diameter) cost US$1237/m. Although the slimhole's greater total depth reduced its overall cost per foot, the intermediate cost of drilling the slimhole to the same depth as the large well was less than 60% of the large well's total cost. This difference is even more compelling when it is known that the large well was not advanced deeper because of a massive lost-circulation zone, which would have been quite expensive to repair and drill ahead.

It should also be noted that, although we believe inference of reservoir properties from slimhole data is valuable and we have devoted considerable effort to that end, there may be many cases when the value of the reservoir will be obvious without extensive calculation. If very high

permeability, such as that at Steamboat Hills, brine, and high temperature are found in an exploratory slimhole, this is strong evidence that a commercially viable resource exists at that location. Conversely, lack of any one of these qualities would be discouraging. Slimhole experience in other reservoir types will enable us to refine data requirements as we better understand the testing and logging required for the exploration program.

Finally, the same attributes that reduce cost also greatly reduce environmental impact. As exploration expands into new areas such as the Pacific Northwest, this may become the critical criterion in regulatory agencies' decisions on whether to issue permits. This technology appears to be the best hope of increasing exploration in an attempt to enlarge the nation's proven geothermal reserves.

CONCLUSIONS

The last two conclusions are specific to the Steamboat Hills geothermal field; the others relate to slimhole exploration in general.

1. Slimholes can be flow-tested, with successful surface and downhole measurements. Relatively cheap and simple surface measurements (James tube and weir box) can give flow rate and downhole enthalpy.

2. The strategy used for these tests appears to have produced the necessary test data, taken with appropriate accuracy, to evaluate the commercial potential of a larger well at this location.

3. Numerical simulation of flow in the wellbore can yield a predictive curve of flow-rate versus wellhead pressure, as shown in the slimhole data. Applied to a larger diameter well, this same simulation will give the same kind of production curve, giving a measure of the reservoir's commercial potential. Extrapolation from the slimhole data to the wellbore diameter of a near-by production well gave a reasonable estimate of the larger well's actual flow rate for a given wellhead pressure.

4. It is desirable to develop a coupled wellbore-reservoir simulator, and to extend this exploration strategy into other reservoir types, to validate the predictive capability of that model.

5. The deeper, hotter reservoir postulated in this location was not encountered down to 1220 m. There is, however, significant permeability below the 248 m production zone, implying that water hotter than 150°C can be pumped from deeper zones, or water from a power plant could be injected into these zones.

6. The existing reservoir is extremely permeable; calculations of transmissivity are probably lower bounds.

RECOMMENDED FUTURE WORK

Although the test results here are encouraging, the highly fractured, highly permeable reservoir may not be generally representative of other geothermal resources. The next step in the slimhole program should be exploratory drilling and testing in reservoirs with different flow characteristics, and comparison of those results with production wells in the new reservoirs. From preliminary negotiations with geothermal operators, we are confident that this can be done, given adequate funding in the near term.

REFERENCES

Combs, J. and Dunn J. C. (1992) Geothermal Exploration and Reservoir Assessment: The Need for a US Department of Energy Slimhole R&D Program in the 1990s, *Geothermal Resources Council BULLETIN,* Nov 92, pp.329-337

de Marsily, G (1986) *Quantitative Hydrogeology*, Academic Press, Orlando, FL, pp. 147-149

Dykhuizen, R. C., and Eaton, R. R., (1993) *Modeling of Geothermal Wells With GEM,* Memo to J. C. Dunn and J. T. Finger, dtd. 1/8/93, Sandia National Laboratories, Albuquerque, NM

Grant, M. A., Donaldson, I. G., and Bixley, P. F., *Geothermal Reservoir Engineering,* Academic Press, New York, NY, 1982, pp. 116-125

Hadgu, T (1989) *Vertical Two-Phase Flow Studies and Modelling of Flow in Geothermal Wells,* PhD Thesis, Univ of Auckland, New Zealand,

Hadgu, T., Zimmerman, R. W., Bodvarsson, G. S., Doughty, C., and Lippmann, M. (1993) *Preliminary Report on Recent Injection and Flow Tests in Well SNLG 87-29 Steamboat Hills Geothermal Field Nevada,* Draft, Lawrence Berkeley Laboratory, Berkeley, CA

Hughmark, G. A., (1962), Holdup in Gas-Liquid Flow, *Chem., Engr. Prog.,* 58(4), pp. 62-65.

Orkiszewski, H., (1980) Predicting Two-Phase Pressure Drops in Vertical Pipe, *J. Petr. Tech.,* pp. 829-838.

This work was supported by the United States Department of Energy under Contract DE-AC04-94AL85000