Subsurface Corrosion Mitigation Experience through Acid Fluid Neutralization in the Tiwi Geothermal Field, Albay, Philippines

Jean Mary M. Libato-Avila[1], Eugene G. Sunio[1], Arnel V. Mejorada[1], and Ramonito P. Solis[2]

[1]Philippine Geothermal Production Company, Inc., Makati, Philippines

[2]Premier Geo-Exel Inc., Laguna, Philippines

JAvila@pgpc.com.ph

Keywords: *Downhole neutralization, corrosion, acid fluids, acid sulfate fluids, fluid pH, Tiwi geothermal field, Philippines*

ABSTRACT

Utilization of wells with acid fluid production is a continuing challenge in many geothermal fields but such conditions also offer considerable opportunity if successfully addressed. One well in the Tiwi Geothermal field in the Philippines was producing near-neutral benign fluids until early 2000 when it started to produce fluids with 2.3 to 3.3 pH. Continuous utilization became impossible without risking the integrity of the production wells and downstream facilities forcing the well to be shut-in for a prolonged period.

A cost-effective means to utilize the well was proposed through downhole neutralization. Injection of caustic soda through capillary tubing was pilot-tested to mitigate the corrosion on the casing and pipeline. Well-53 has been producing over 3 – 4 MW of additional steam since the start of NaOH dosing with acceptable pH levels while maintaining low corrosion rates. Several improvements in the dosing facility and procedures have been identified to enable more real-time monitoring and greater flexibility in terms of operation.

The success of the acid neutralization test opens up opportunities not only in the utilization of other idle acid-fluid producing wells and future new wells in acidic areas of Tiwi, but also in the feasibility of developing greenfield low pH geothermal reservoirs.

1. INTRODUCTION

1.1 Tiwi Geothermal Production History

The Tiwi geothermal production field is located at the Southern Luzon region of the Philippines (Fig.1). It is the first geothermal field ever developed in the Philippines with over 60+ active production and injection wells. The development of the field faced typical problems such as acidic brine production, low permeability and cooler water inflow, to name a few.

Quite a number of production wells drilled in Tiwi have produced acidic fluids (mostly of acid-sulphate type) during the early stages of utilization that despite their high productivity, some were plugged and abandoned due to safety and environmental issues, some remained shut, while a few are producing at high flowing wellhead pressures (throttled) to isolate production from liquid acid feed zone/s (i.e. SE of Bariis and Matalibong sectors).

The N-NW portion of the field also experienced superheating in the past where production wells affected produced HCl in separated steam. Surface facilities were improved to address the superheating and corrosion. Injection returns from the Matalibong Injection Ridge have also helped in the total expulsion of superheat in the area.



Figure 1. Map of Tiwi Geothermal Production Field, Philippines.

Experiences on and challenges of acid fluid production and the measures taken to prevent corrosion and scaling were described and discussed by Andres et. al (2015), Gudmundsson et.al (1990), Gallup et.al (1998), Koga et.al (2000), Paete et. al (2015) and Sussman (2014).

Acid well neutralization and utilization experiences from other geothermal fields that were reported by Catigtig et al. (2018) and Marbello (2020) have provided detailed successful case studies in acid well neutralization and scaling issues encountered in acidic geothermal wells at the Biliran Geothermal Field. The authors discussed the various strategies employed to mitigate these challenges, including the use of chemical inhibitors, careful material selection, and operational adjustments. They included case studies from the fields, offering practical insights into the effectiveness of these mitigation techniques and their impact on well performance.

The acid neutralization test aimed to test the effectivity of raising fluid pH via caustic soda dosing and provide recommendation for potential permanent facility installation. The first well that was applied with corrosion mitigation system (CMS) in Tiwi was Well-08 at the Bariis sector in 2008 – 2009. It was successful in utilizing the acid well through pH modification using caustic soda. However, the tubing cannot anymore be pulled-out due to scaling leading to termination of the test.

1.2 Well-53 Production and Chemical History

Well-53 initially produced neutral pH, alkaline type of fluids but later produced acid fluids of pH < 3.5 (see Fig. 2). Its initial-state reservoir chloride ranged from 5,500 – 6,500 ppm with TNKC of 265 °C and initially higher gas contents, typical of its area, until 2006 when its reservoir chloride and fluid pH started to decrease while reservoir sulfate increased (see Fig. 3). Gas concentrations at separator pressure also significantly dropped as a result of colder acid fluids creeping into the well's discharge.

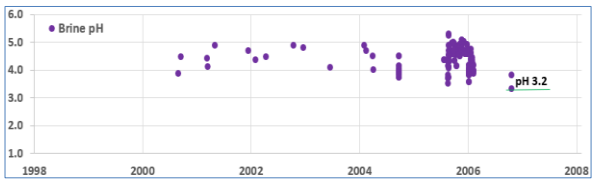

Figure 2. Well-53 Historical Brine pH.

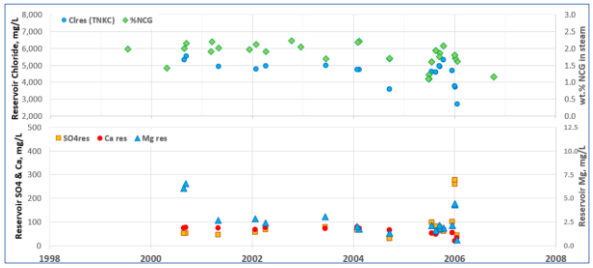

Figure 3. Selected historical geochemical parameters of Well-53.

2. ACID WELL UTILIZATION PILOT TEST

Well-53 had been idle after 2006 when it produced brine of < 3.5 pH. When the need to increase steam supply arose, there was a massive campaign to utilize idle wells through new technologies. Well-53 had been selected for acid well utilization through caustic soda downhole injection.

Data gathering initiatives were performed to formulate possible dosing concentration and injection pressure to effectively raise fluid pH without enhancing corrosion and wellbore scaling.

Well-53 was flowed to the atmosphere for a minimum of three days. The on-site pH monitoring (Fig. 4) determined that even at varying flowing wellhead pressures, fluid pH will persistently be acidic, that if flowed for a longer period, corrosion will occur.

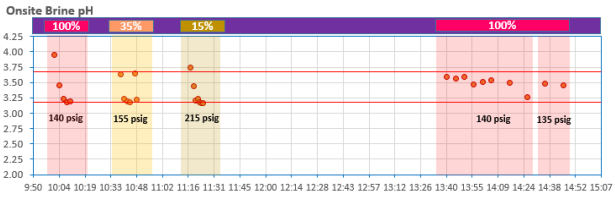

Figure 4. On-site pH monitoring during Well-53 flow test.

Pipeline thickness monitoring was through ultrasonic thickness gauging (UTG). Aside from UTG, scale probe, caliper and pressure-temperature surveys were performed to monitor extent of thinning attributed to corrosion in the wellbore and pipings.

UTG results indicate significant thinning along the bypass and two-phase lines especially at the elbows and bends. This has been mitigated in the past through weld-patching and regular monitoring.

Downhole sampling was also included to further characterize reservoir and downflowing fluids at Well-53. Downhole chemistry showed that acid fluid inflows from the top-most feed zone.

Furthermore, the Cl-HCO_3-SO_4 (Fig. 5) specified that the fluid source is of chloride-sulphate type, from the possible mixing of chloride, benign reservoir fluids with shallow, acid waters. This is consistent with the interpretation of Vicedo et.al (2010) suggesting that the acid fluid in the Matalibong-Bariis sector is located at the shallow steam feed zone. This acid fluid down flows during shut conditions to form mineral scale such as anhydrite.

The Na-K-Mg ternary diagram (Fig. 6), in addition, showed that the fluids are only partially equilibrated with the reservoir rocks and are immature and of low temperature as that of an acid fluid.

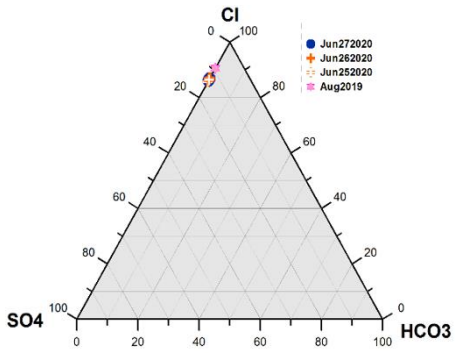

Figure 5. Cl-HCO3-SO4 ternary diagram of Well-53 fluids.

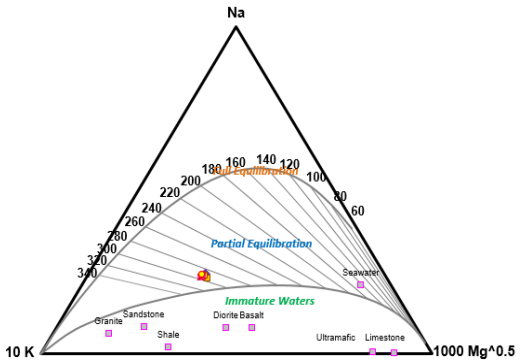

Figure 6. Na-K-Mg ternary diagram of Well-53 fluids.

2.1 Acid Neutralization System Components

The acid neutralization system is composed of two main parts: the surface pumping system (Fig. 6) and the subsurface delivery system (Fig. 7).

The surface pumping system consists of low- and high-pressure lines. The low-pressure piping is dedicated for transfer and mixing of caustic soda to the desired concentration while the high-pressure, stainless-steel piping is designed to withstand the corrosiveness of caustic soda as well as the high downhole pressure for caustic downhole delivery.

Installation of two storage tanks for fresh water and caustic soda (w/w 50%) enabled for continuous supply of fluids for the mixing skid. A 1000-L mixing tank with agitator is where the desired NaOH concentration is prepared. The solution is transferred to another 1000-L stainless steel dosing tank for downhole injection through a nickel-chromium-molybdenum (Ni-Cr-Mo) alloy tubing. Attached to this tubing is the bottom-hole assembly composed of weight bars, injection sub, check valve and fishing neck.

The dosing skid design was later modified to withstand strong winds and typhoons to lessen operational downtime and potential generation loss. The modification also includes safety and environmental aspects such as reinforcing the chemical tanks foundation, spill containment and drainage.

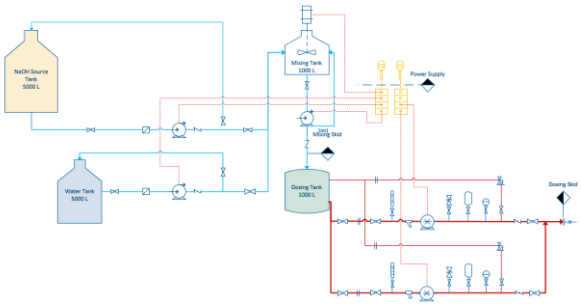

Figure 7. Acid Well Utilization Dosing System during the pilot testing.

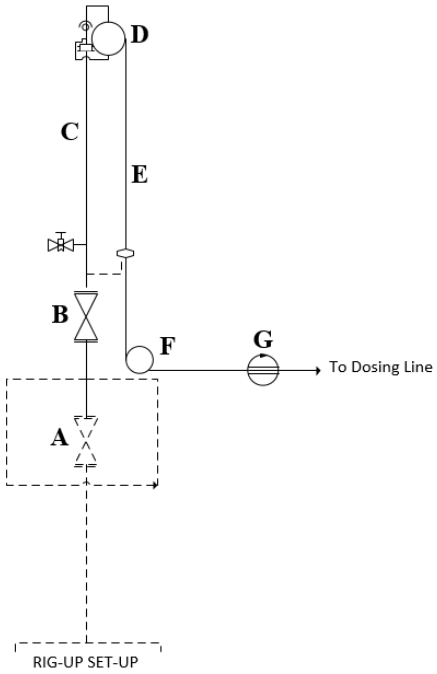

Figure 8. Acid Well Utilization rig-up setup during pilot testing: A) Wellhead assembly, B) Top valve, C) Recovery spool, D) Top sheave, E) Tubing, F) Bottom sheave, G) Tubing drum/purging set.

2.2 Acid Well Utilization Pilot Test Results

During the fluid chemistry evaluation of Well-53, a series of table-top and mineral scaling simulations were conducted to simulate possible mineral scale formation at different pH ranges. The simulations indicated that at pH above 6.0, mineral scales such as anhydrite, calcite, and iron and magnesium silicates would form. This led to the setting of desired pH range of 5.0 – 5.5 to prevent both corrosion and mineral scaling.

The caustic soda injection commenced on November 26, 2023, achieveing the desired surface brine pH of 5.0 – 5.5 on the second day.

The well was initially discharged to the atmosphere while adjusting the fluid pH. It was later diverted to the power plant. The well's flowing WHP remained stable at 100 – 105 psig during the four-month pilot test.

Dissolved iron levels have dropped since caustic dosing – from around 60 ppm (Y2006) to <1 ppm to 2 ppm (present) and stabilized within this range. Corrosion rates have also been reduced within the pH of 5.0 – 5.5. pH has a direct effect on iron (dissolved Fe) concentration (Fig. 9), hence directly related to corrosion rate, and thus, for this pilot testing, iron was used primarily to indirectly predict corrosion rate.

Moreover, it was determined also that upon caustic dosing, Well-53 fluid pH can be increased within 4 hours and achieve stability, and within 5 – 7 hrs. of sump discharge with dosing, Well-53 can be diverted to the power plant.

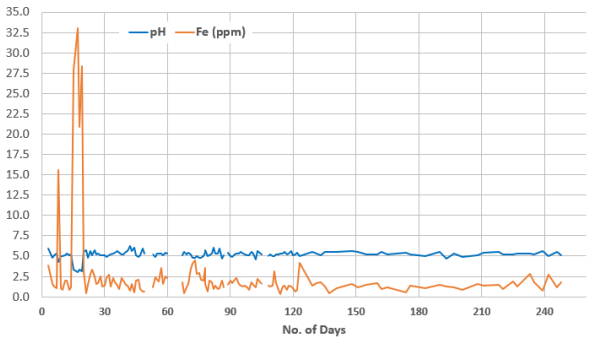

Figure 9. Dissolved iron and fluid pH of Well-53 during acid well utilization pilot test.

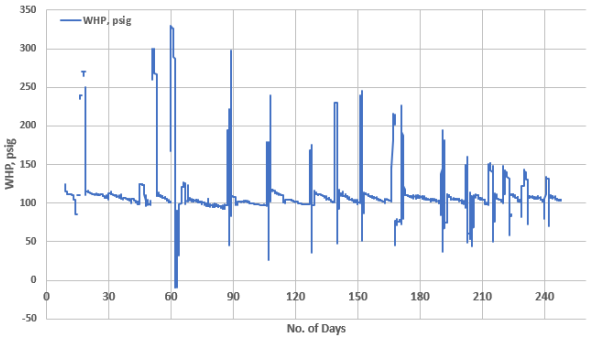

Figure 10. Wellhead pressure trend of Well-53 during acid well utilization pilot test.

A tubing retrieval exercise was conducted between December 12 and 14, 2023. This is done to prevent stuck-up just like what happened in the corrosion mitigation system at Well-B08 in 2008.

Additionally, dosing rate cannot be stabilized, since it changes with mass flow fluctuations. This normally declines with time, as mineral scaling progresses under massive

pressure drawdown and in effect, has resulted in massive flashing at reservoir resulting in a drop in water flow.

Figure 10 shows that the WHP declined continuously as mineral scaling progressed coupled with pressure drawdown. Total production loss from severe mineral deposition was prevented through regular well cut-out from the system and discharging to the atmosphere to dislodge newly formed scales.

Well-53 fluid before acid neutralization in 2021 – Oct 2023 is typical of acid-sulphate fluid chemistry with high sulphate, magnesium and iron values, and low fluid pH and chloride.

During acid neutralization starting Nov 2023, pH was effectively increased to above 4.0 and iron levels significantly declined from 49 ppm (Y2021) to < 3.0 ppm (2024), suggesting reduced corrosion.

Table 1. Chemistry of Well-53 Fluids.

Parameter	2021	2023			2024		
	May	Oct	Nov	Dec	Jan	Feb	Mar
Sampling Pressure, MPaa	0.67	0.6	0.51	0.72	0.72	0.74	0.79
FWHP, MPaa	0.94	1.07	0.88	0.87	0.84	0.88	0.82
Enthalpy, kJ/kg	1271	1718	1726	1809	1593	1671	1458
pH	3.02	3.14	5.54	4.99	6.71	6.35	5.05
Na, ppm	2450	2620	2770	1620	2900	2880	2680
K, ppm	460	500	500	310	560	570	520
Ca, ppm	12	18	8	4.3	8.7	11.8	12.9
Mg, ppm	10.3	12	7	3.3	5.6	11	6.1
B, ppm	46	42	43	63	54	45	47
Cl, ppm	3800	4400	4200	2490	4500	4600	4400
Fe, ppm	47	43	3.8	2.02	3.1	3.3	2.66
SO4, ppm	683	387	487	342	49	568	526
SiO2, ppm	700	670	550	350	610	590	560
TQuartz, °C	263	253	235	247	257	249	260
%NCG (total discharge)	0.61	1.04	0.9	1.13	1.38	1.26	0.87

Mineral scaling simulation through chim-XPT using the 2024 Well-53 chemistry showed supersaturation of fluids with respect to anhydrite, magnesium silicates, iron sulfides, and iron silicates. The scale identification through X-ray Diffraction (XRD) indicated presence of sphalerite, pyrite, jarosite and siderite on scales retrieved (Fig. 11) from the bottomhole assembly, confirming the chemical simulation.



Figure 11. Actual scales retrieved from Well-53 bottomhole assembly during tubing retrieval exercise.

Figure 12 is a simple wellbore diagram of Well-53 indicating the top of blockage relative to the bottom-hole assembly. The anhydrite blockage was located 120 meters below the acid feed zone at 915 mMD. The bottom-hole assembly was set at 1006 mMD.

During the early period of the pilot test, that is, from November to December 2023, the bottomhole assembly was retrieved and inspected. Inspection showed no signs of corrosion and injection nozzles were clean from mineral scaling.

After more than a month of no tubing retrieval exercise, the bottomhole assembly was stuck at the setting depth of 1006 mMD and remained stuck as of this writing. Efforts to retrieve were unsuccessful.

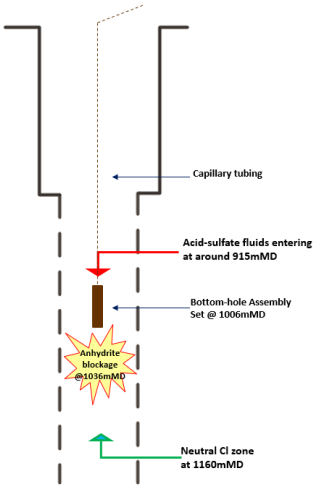

Figure 12. Anhydrite blockage location at Well-53 relative to the bottomhole assembly.

3. ECONOMIC CONSIDERATIONS

The testing phase, particularly, the acid neutralization pilot test, serves not only as a proof of concept but also as a financial model that illustrates how the generated proceeds can offset the initial capital expenditure.

Through acid neutralization, Well-53 was finally re-utilized for power production in December 2023, contributing 3 – 4 MW of steam at a daily average caustic soda consumption of 400 – 500 liters. This translated to a monthly chemical expediture of USD 5,500. The revenue during the testing was determined enough to continue operating the acid neutralization system on Well-53, with full recovery of cost from major capital items and some operational expenditures.

4. CONCLUSION

The acid neutralization experiment conducted on Well-53 at the Tiwi Geothermal Field has been proven to be a successful strategy for mitigating subsurface corrosion and enabling the continued utilization of a previously idle well. Over the course of four months, the well consistently produced 3 – 4 MWe of electricity, with stabilized fluid pH levels between 5.0 and 5.5 and significantly reduced corrosion rates.

This study highlights the effectiveness of caustic soda dosing in neutralizing acidic fluids, thus preserving well casing and surface pipeline integrity and extending the operational life of geothermal assets. The pilot test was determined to be economically feasible after four months of continuous operation.

The findings underscore the potential for applying similar techniques to other acidic wells, both within Tiwi and in other geothermal fields facing similar challenges.

5. RECOMMENDATIONS

Here are some of the recommendations from the testing:

1. Tubing maintenance: Conduct frequent tubing exercises to prevent stuck-up incidents, similar to the past experience at Well-08. This will help maintain the operability of the acid neutralization system.

2. WHP Management: Implement periodic well "burping" by shutting and discharging the well to the atmosphere to arrest WHP decline caused by ongoing mineral scaling. This method has been proven effective in restoring wellhead pressure.

3. Mineral Scaling Mitigation: Develop a comprehensive strategy to manage mineral scaling. Consider temporary shutdowns and full-flow procedures as part of the scaling management plan.

4. Caustic Soda Dosing Optimization: Explore alternative methods for onsite preparation of caustic soda (e.g., using flakes, pearls, or pellets) to optimize dosing efficiency, cost, and logistics.

5. Injection Sub Positioning: Evaluate wellbore conditions, including casing and liner integrity, to strategically position the injection head above any damaged sections, reducing the risk of operational disruptions.

6. Capillary Tubing Operation Enhancement: Prioritize the evaluation of Capillary Tubing Unit (CTU) operations to identify potential obstructions.

7. Skid Design Improvement: Refine the skid prototype by addressing weather resistance, space requirements, and operational flexibility.

8. System Reliability: Plan for regular system downtime to proactively address potential pipe thinning issues that can be identified through corrosion monitoring.

9. Operational Flexibility: Enhance the system's operational flexibility by providing spare components such as dosing tanks and pumps, and by ensuring proper adjustment and testing of critical panel settings.

10. Future Applications: Consider extending the neutralization technique to other acidic wells and explore its applicability to greenfield projects in low – pH geothermal reservoirs.

ACKNOWLEDGEMENTS

The authors wish to thank Philippine Geothermal Production Company Inc. and Premier Geo-Exel Inc. for allowing the publication of this paper.

REFERENCES

Aldea, E.: Well performance and production strategies in the Biliran Geothermal Field." *Proc. 41st Workshop on Geothermal Reservoir Engineering (2016)*, Stanford University, California. (2016).

Andres, R. B. and Candelaria, M. N. R. (2015). "Corrosion and Scaling Mitigation in the Biliran Geothermal Field." Geothermal Resources Council Transactions, 39, 137-142.

Catigtig, D.C., Dela Peña, A., Almonte, R., and Danao, E.: Corrosion and scaling management in acidic wells: experiences from the Biliran geothermal field." *Proc. 44th Workshop on Geothermal Reservoir Engineering (2019)*, Stanford University, Stanford, California. (2019).

Diaz, A. I., & Mercado, S. (1995). "Experience with acid fluid production at the Cerro Prieto geothermal field, Mexico."Geothermal Resources Council Transactions, 19, 159-165.

Einarsson, E., et al.: Acid wells in the Krafla geothermal field. *Proc. World Geothermal Congress 2010*, Bali, Indonesia. (2010).

Gallup, D. L. (1998). "Corrosion in geothermal energy production."Geothermics, 27(1), 145-161.

Gudmundsson, B. T., & Sigurdsson, Ó. (1990). "Corrosion and scaling during acid fluid production at the Krafla geothermal field, Iceland." Geothermal Resources Council Transactions, 14, 1189-1195.

Hauksson, T., Ingason, K., and Sigmarsson, T.: Mitigation of corrosion by down hole neutralization of acidic brine in geothermal wells in Biliran, Philippines. *Proc. The 5th Indonesia International Geothermal Convention & Exhibition 2017*, Jakarta Convention Center, Jakarta, Indonesia. (2017).

Hoshan, P. and Kaya, T.: Corrosion and material selection for geothermal systems. *Proc. World Geothermal Congress 2005.* Antalya, Turkey. (2005).

Koga, Y., and Kodama, K.: Utilization of acidic geothermal fluids in Japan. *Proc. World Geothermal Congress 2000*, Kyushu-Tohoku, Japan. (2000).

Lichti, K.A., et al.: Acid well utilisation study: well MG-9D, Philippines. *Proc. World Geothermal Congress 2010*, Bali, Indonesia. (2010).

Marbello, A., et al.: Fluid management system – acid well neutralization experience for the Biliran geothermal field, province of Biliran, Philippines. *Proc. 45th Workshop on Geothermal Reservoir Engineering 2020*, Stanford University, Stanford, California. (2020).

Moya, P., Nietzen, F., and Sanchez, E.: Development of the neutralization system for production wells at the Miravalles geothermal field. *Proc. World Geothermal Congress 2005*, Antalya, Turkey. (2005).

Moya, P. and Nietzen, F.: Performance of calcium carbonate inhibition and neutralization systems for production wells at the Miravalles geothermal field. *Proc. World Geothermal Congress 2010*, Bali, Indonesia. (2010).

Nietzen, F.: Some aspects related to chemical systems used in the exploitation at the Dr. Alfredo Mainieri Protti geothermal field (formerly Miravalles geothermal field), Costa Rica. *Proc. 44th Workshop on Geothermal Reservoir Engineering 2019*, Stanford University, Stanford, California. (2019).

Paete, F. N., Santos, F. A., & Austria, J. J.: Fluid chemistry of the Biliran geothermal field: Implications for resource management and development.

Proc. 37th New Zealand Geothermal Workshop 2015, Taupo, New Zealand. (2015).

Rodriguez, A. Amorphous iron silicate scales in surface pipelines: characterization and geochemical constraints on formation conditions in the Miravalles geothermal field, Costa Rica. Geothermal Training Programme, The United Nations University, Reykjavik, Iceland. pp 429 – 450. (2006).

Sussman, D., & Delliou, J.: Challenges and opportunities in the development of the Biliran geothermal field." *Proc. 39th Workshop on Geothermal Reservoir Engineering (2014)*, Stanford University, California. (2014).

Vicedo, R. and Villaseñor, L.: Exclusion of acid sulfate fluid in wells at Tiwi geothermal field, Albay province, Philippines. *Proc. World Geothermal Congress 2010*, Bali, Indonesia. (2010).

Villaseñor, L.B. Corrosion Watchlist – April 2001. CGPHI Internal report (2001).

ISSN 2703-4275