Proceedings World Geothermal Congress 2023
Beijing, China, April 17 – 21, 2023

Experimental examination of the supercritcal Organic Rankine Cycle MoNiKa

H.-J. Wiemer, J.Mardon Pérez

wiemer@kit.edu

joaquinmardon@gmail.com

Keywords: ORC, supercritical, low temperature waste heat

ABSTRACT

Organic Rankine Cycles (ORC) are used to generate electricity from low temperature heat sources in the temperature range of 100 - 260°C. In order to reduce the climate change environmentally friendly working fluids has to be use for these cycles and the maximization of the net electricity yield should be the major topic. For these reasons, we pursue the approach of a Supercritical Organic Rankine Cycle (SORC) with propane as the working fluid Vetter et al (2013).

In order to validate our simulation models, such an SORC power plant with a thermal heat source capacity of 1MW was built at the Karlsruhe Institute for Technology (KIT) Campus North. This study reports the first experimental results with a 4-stage axial turbine especially developed for propane. Additionally, we compare these results with a steady state thermodynamic simulation. This self-developed in house Matlab code GESI allows simulating the SORC, based to the REFPROP database, at different boundary conditions and loading points Vetter (2014).

The experiments include different load points with a propane mass flow in the range of 2.1 to 2.8 kg/s and a turbine inlet pressure of 4.5 to 5.6 MPa. In order to reduce the pressure loss due to the turbine control valve we fully open this valve after the synchronization, but it was recognized that above 18 % valve position the influence of the valve to the pressure level is neglectable.

Due to the limitations in the operation of the heat exchanger, the turbine cannot be operated at the planned design point with turbine inlet temperature of 117°C. The maximal temperature reached in the test runs was 111°C.

The max. power output for this off design point was 112.9 kW. The max. isentropic turbine efficiency was determined between 85% - 91%. With a multiparameter correlation analysis we determine the coefficients for the turbine efficiency as a function of mass flow and pressure.

Additionally, we developed an equation for the mass flow in relation to the live steam pressure, temperature and the outlet pressure based on the Stodola´s equation Strauß (1998).

1. INTRODUCTION

The use of geothermal energy can help meet the demand for low-carbon energy technologies in the near future. This technology can make a significant contribution to the heat supply in Germany. The fluctuations that occur due to seasonal variations in ambient air temperature, the varying demand for thermal energy and the requirement to operate a geothermal reservoir as uniformly as possible lead to the question of how the surplus heat in summer can be used energetically.

One option is to convert this excess heat to electricity in an Organic Rankine Cycle (ORC) power plant. For the climatic conditions found in Germany, electricity generation is technically feasible from a thermal water temperature of above 100°C.

Due to the low temperature, it is not possible to use the fluid directly from the thermal water, but instead it can exchange heat with another secondary fluid that evaporates at a lower temperature than the thermal water. Isobutane, halogenated hydrocarbon, propane, refrigerants, etc. are often used as secondary fluid. After evaporation, this fluid is in turn injected into a turbine, condensed and pumped into a continuous closed loop.

The objective of this study is to optimize the net electricity yield, which can be influenced by the choice of working fluid, the design of the power plant cycle, the number of pressure levels and the operation of the power plant. According to studies by Vetter (2014), the choice of supercritical propane as the working fluid can increase the net electricity yield significantly compared to subcritical ORC.

In addition, Liu et al. (2019) shows that the leakage of the working fluid during the life of the power plant must be taken into account in order to obtain a realistic value for the reduction of CO_2 emissions. In his study, propane is the fluid with the best performance regarding the environmental aspect.

In order to verify Vetter's simulations, an experimental power plant MoNiKa has been built at KIT's North Campus. This paper focuses in the study of the turbine test runs from Mardon Pérez (2022) in Nov. 2021. The results of this study provide a validated description of turbine efficiency that can then be used for scaling to larger power classes.

2. EXPERIMENTAL SETUP

The modular Low Temperature Cycle Karlsruhe is the acronym for MoNika, facility installed in the Institute of Thermal Energy Technology and Safety (ITES) [Kuhn]. The main purpose of this facility is to study geothermal power generation and low-temperature electricity generation. With the main individual components studied separately as well as together to find results and thus contribute to increase the economic efficiency of power generation from the low enthalpy geothermal source.Fig.1 illustrates the facility of MoNiKa power plant.

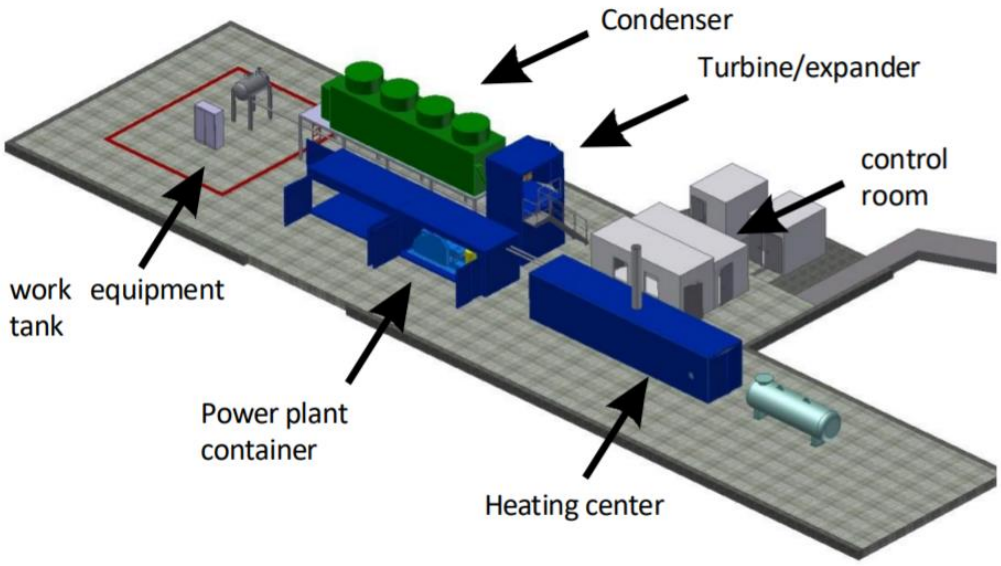

Figure 1: MoNiKa Power plant facility

The power plant is connected to an oil-fired boiler, which acts as a heat source. This allows to vary the temperature and mass flow rate within certain limits. In addition, certain conditions that are unfavorable for the components, such as corrosion, scaling or different compositions of the water from the heat source, can be excluded.

The design point of operation was defined at the turbine inlet with 5.5 MPa and 117 °C live steam pressure and temperature. Propane has a critical pressure of 4.25 MPa (P_{crit}) and a critical temperature of 96.74 °C (T_{crit}). The main pump provides pressure boost with a pressure ratio of 5 at a nominal mass flow rate of 2.9 kg/s. The heat exchanger then raises the temperature of the working fluid. All pressures mentioned in this paper are absolute pressures; for relative pressures this is indicated.

2.1 Components

An overview diagram for the power plant area is shown in Figure 2. In this diagram, the circuit for turbine operation is shown in red and the dashed gray line shows turbine bypass operation. Control valves 10PRV01 and 11PRV01 can be used to control the steam pressure in the feed line and then to depressurize it to the pressure of the condenser. Thus, an investigation of the turbine characteristics is possible in a wide operating range. As shown, five main components are required in the MoNiKa power plant.

- ORC support pump Grundfos CRN20-04 E-FGJ-G-E centrifugal 5kW
- ORC main pump LEWA triplex M514US G3G (Membrane) 75kW
- Heat Exchanger Gesmex - 1000 kW
- Expansion Valve Vetec type 73.7 -
- Condenser KÜHLTURMKARLSRUHE KAKVH
- Propane Tank KAH - 2400L PN25 bar

The condenser, consists of six symmetrical, V-shaped heat exchangers, which suck in the air in three fan chambers and cool the propane with the ambient air after it exits the turbine. The power consumption of a fan motor is max. 13 kW at 322 rpm and a maximum flow rate of 44 m^3 /s.

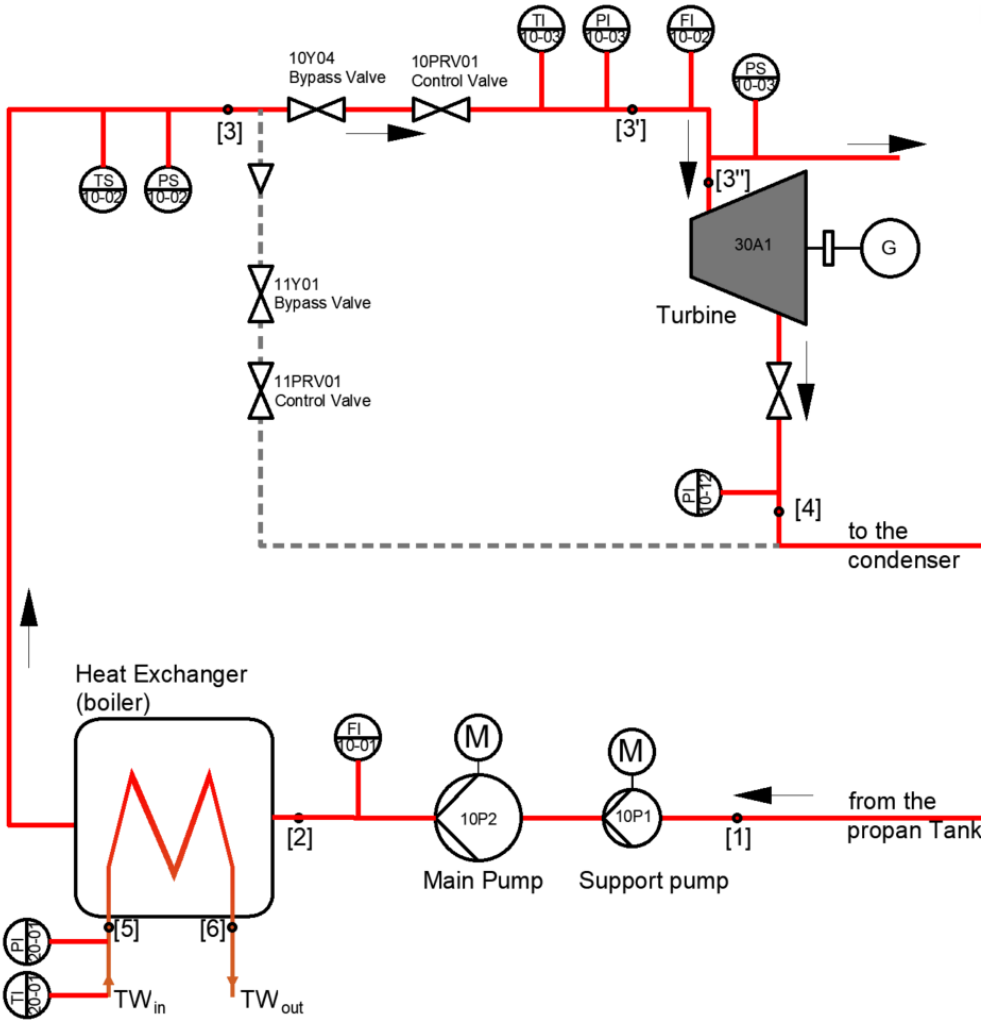

Figure 2: Scheme of the MoNiKa power plant

The main pump, a LEWA Triplex M514US G3G, is a triple piston pump with a maximum mass flow of 3.6 kg/s and a design pressure of 6.5 MPa. To avoid cavitation at the main pump, a Grundfos centrifugal pump (CRN20-04 E-FGJ-G-E) with a maximum power of 5.5 kW is installed as a backing pump.

The heat exchanger, which replaces the thermal heat source, is supplied by GESMEX. It has the potential to operate in both subcritical and supercritical cycles. It is designed for a thermal output of 1000 kW in full operation, with water (simulating the thermal source) as the working fluid with parameters of 0.7-1 MPa and 40-160°C. While the propane side can accept pressures between 4.2 and 6.3 MPa and temperatures between 20 and 130°C (in our experiment we reached 113°C as maximum temperature). Table 1 shows the differences between the design point, the maximum value and the maximum value achievable in the MoNiKa plant. We have not been able to achieve the desired temperatures due to unresolved issues with the heat exchanger, forcing us to run the plant in off-design.

The turbine, manufactured by M+M Turbinen-Technik (2015), is installed between the heat exchanger and the condenser. The turbine is a 4-stage axial impulse turbine designed for maximum inlet parameters of 6.3 MPa and 130 °C of pressure and temperature.

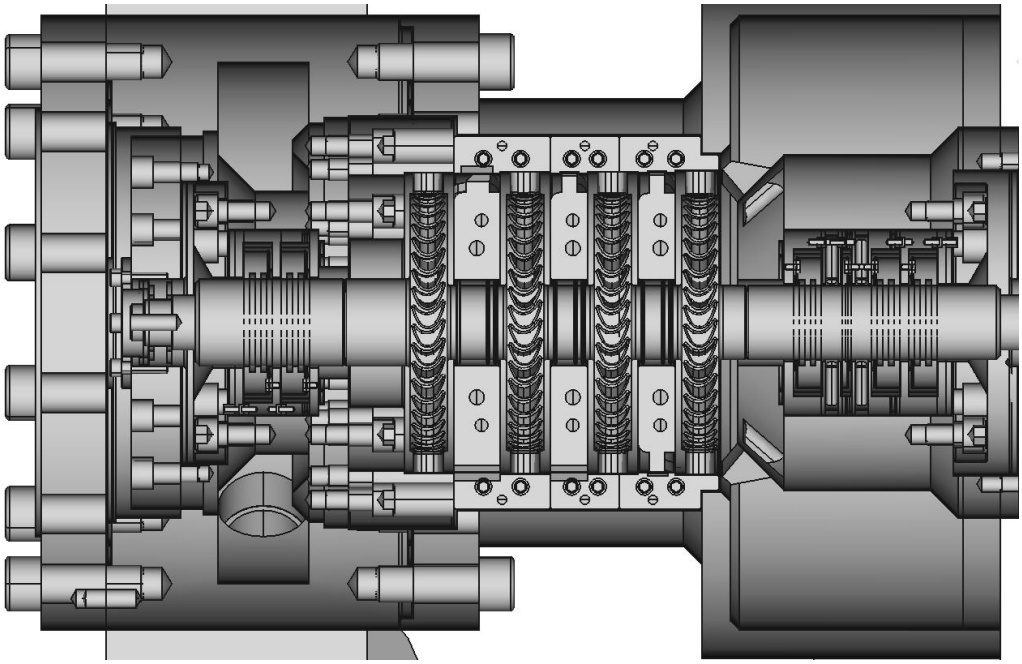

Figure 3: Cut of the propane turbine provided by the manufacturer M+M TURBINE-TECHNIK (2015)

Table 1: Properties of the heat exchanger

	Propan			Water		
	Max press. p_3 [bar]	Max temp. T_3 [°C]	Mass flow $\dot{m}_{prop}$ [kg/s]	Max press. p_s [bar]	Max temp. T_s [°C]	Mass flow $\dot{m}_{tw}$ [kg/s]
Max ideal values	63	130	2.90	12	160	2.60
Max real values	58	113	2.85	8.40	160	2.62
Design points	55	117	2.90	7-10	150	2.60

Sensors and measurement system

This work is an important database for measuring certain components before and after the turbine. Vegabar 81 and 82 were used as pressure sensors. These have a measurement uncertainty of 0.2% of the measuring range. TR34 ClassA sensors with a max. measurement uncertainty of 0.4°C were used for temperature measurement. The mass flow was measured with the Promass 83F. Here, the max. measurement uncertainty is only ±0.006 kg/s.

3. EXPERIMENTAL PLANNING AND ANALYSIS

The experiments were conducted on 9, 10 and 11 November 2021. The turbine output is taken as a common reference point to determine the state of the power plant at each operating point, together with the thermodynamic simulations with our Matlab simulation tool GESI (Geothermal Simulation) Vetter (2014) and the NIST software REFPROP for the physical properties of the working fluid.

A few operating points planned in advance with the GESI software could not be investigated experimentally, as these state points could not be reached due to safety limits but also due to the reduced performance of the heat exchanger.

The Safety limitations are:

- Vapor quality at turbine outlet (4) should never be less than $X < 0.80$. in case of occurrence, the formation of droplets inside the blades may cause damage to the blades.
- If the boiler temperature exceeds 160°C, the heating station switches off due to the material design limits.

Thermodynamics value:

Due to the reduced performance of the heat exchanger, the power plant does not reach a temperature of more than 113 °C for $\dot{m}_T < 2.2\,kg/s$ and 109 °C for $\dot{m}_T > 2.6\,kg/s$ at the inlet of the turbine (point 3) under the given boundary conditions. For comparison, the design temperature at the turbine inlet is 117 °C.

First day

Table 2 shows seven different load points that were previously simulated in the GESI-ORC partial load module for steady-state conditions. Once the load points were established, they were transferred to the actual working conditions of the plant.

The experiment began with a prolonged warm-up period, starting the cycle in bypass mode and ramping up the hot water boiler. The warm-up ends when the temperature rise of the main pump is below 0.5 °C for at least 30 minutes. This process takes about 4 hours. After warm-up, the load points were started with an average duration of 30 minutes each, and after completion of the 7 load points, the test day was ended with the regular shutdown of the power plant.

Table 2: First day experimental setup

			ORCs-cycle			Thermal-Water		
Date	Time Schedule	Run	$\dot{m}_T$ [Kg/s]	p_3 [MPa]	T_3 [°C]	$\dot{m}_5$ [Kg/s]	p_5 [MPa]	T_5 [°C]
08.11.21	08:00-12:15	Warm-up	-	-	-	-	-	-
	12:15-12:45	1.1	2.1	5.5	112.0	2.4	0.8	150.7
	12:45-13:34	1.2	2.6	5.5	109.0*	2.4	0.8	150.7
	13:34-14:02	1.3	2.4	5.3	108.0	2.4	0.8	150.0
	14:02-14:40	1.4	2.2	5.3	109.0	2.4	0.8	150.0
	14:40-15:12	1.5	1.9	5.3	110.6	2.4	0.8	150.0
	15:12-15:46	1.6	1.9	5.3	110.6	2.5	0.8	151.0
	15:46-16:15	1.7	2.5	5.3	108.6	2.5	0.8	151.0
	16:15-17:00	Shut down	-	-	-	-	-	-

*In site was no possible to reach more than 109.0 K

Second day

The second day was for a sensitivity study when opening the turbine control valve. As on the first day, the test began with a warm-up phase that lasted 4 hours. Then the opening of the turbine control valve (10PRV01) was stepwise increased while measuring the pressure in front of the turbine. Es an example the opening of the turbine control valve during the test runs on the second day is mentioned in Figure

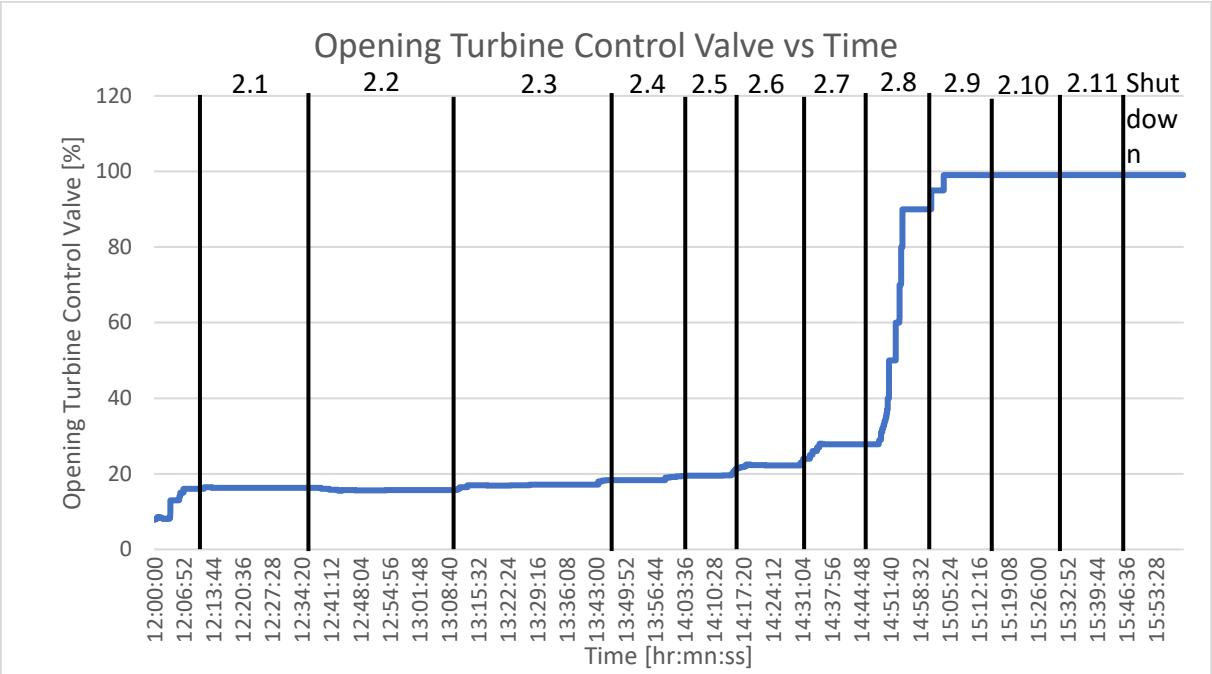

Figure 4: Pressure 3'' vs load - second day

Above a turbine mass flow of more than 40 % and fully open turbine control valve and constant propane temperature, the propane pressure changes proportionally to the mass flow according to the Stodola's law, Strauß (1998). This sliding pressure control is preferred when the load is above 40%. The next figure Fig.5 shows the transition from fixed pressure control to sliding pressure control in the MoNiKa power plant, with the bypass valve fully closed during the warm-up phase. The minimum mass flow rate at which the plant can be operated in sliding pressure operation is $\dot{m}_T = 2.3\, kg/s$.

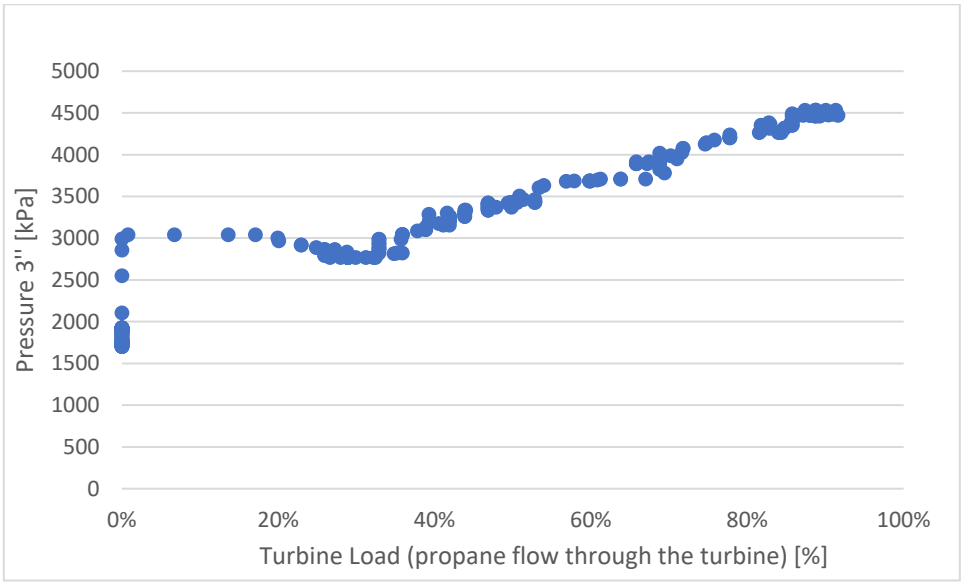

Figure 5: Pressure 3'' vs load - second day

Third day

Experiments with the stepwise increase of the ORC mass flow rate were planned for the last day. The experiments started with a $\dot{m}_T = 2.1\, kg/s$ and were then increased by 0.1 kg/s until a turbine mass flow of 2.8 kg/s was achieved. After the warm-up period, there was a problem with the boiler temperature control. The boiler exceeded the 160 °C limit, causing the control system to automatically shut down the boiler. After the boiler could be restarted and stabilized, the warm-up phase was properly finished. However, due to the increased water temperature compared to the previous experiments, larger temperature fluctuations with a frequency of 6 minutes occurred on this test day, which were transmitted to the propane cycle.

The state points were simulated in GESIteillast parallel to the experiments to compare the results. Since the mass flow was the only variable that changed, it was found in the simulations that the cycle could change from a supercritical to a subcritical state as the mass flow increased and without increasing the turbine inlet temperature. This was an important limit for the experiments also due to the temperature fluctuations at the boiler outlet. Tab.3 shows the average values of the individual load points over the experimental day.

Tab.3: Third day experimental setup

			ORCs-cycle			Thermal-Water		
Date	Time Schedule	Run	$\dot{m}_T$[Kg/s]	p_3	T_3	$\dot{m}_5$	p_5	T_5
10.11.21	08:00-13:34	Warm-up*	-	-	-	-	-	-
	13:34-14:04	3.1	2.1	4.5	100.7	2.4	0.8	152.5*
	14:04-14:43	3.2	2.2	4.6	102.5	2.4	0.8	152.3*
	14:43-15:12	3.3	2.3	4.8	101.8	2.4	0.8	152.2*
	15:12-15:42	3.4	2.4	4.9	102.9	2.4	0.8	151.0*
	15:42-16:02	3.5	2.5	4.9	103.6	2.4	0.8	151.4*
	16:02-16:12	3.6	2.6	5.1	104.4	2.4	0.8	150.5*
	16:12-16:30	3.7	2.7	5.0	104.4	2.4	0.8	149.5*
	16:30-17:02	3.8	2.8	5.0	103.7	2.4	0.8	152.0*
	17:02-17:45	Shut down	-	-	-	-	-	-

Analysis

The analysis of the experimental data has the objective to calculate the turbine efficiency which is defined as:

$$\eta_T = \frac{h_{3''} - h_4}{h_{3''} - h_{4,s}} \tag{1.1}$$

The enthalpy at the turbine outlet h_4 (Fig.2) cannot be determined because in the two-phase region the measurement of pressure and temperature is not sufficient to calculate the thermodynamic state variables. Therefore, the turbine outlet conditions are calculated with the REFPROP database, the inlet condition at point 3''(Fig.2) and the measured turbine power. The isentropic enthalpy at the turbine outlet $h_{4,s}$ can be determined using the entropy and enthalpy at the turbine inlet and assuming an isentropic process, thus $s_{4,s} = s_{3''}$. Then the enthalpy difference of the turbine can be determined by knowing the power output from the turbine and dividing it by the mass flow through the turbine.

$$(h_{3''} - h_4) = \frac{P_{gen}}{\eta_{gen} \cdot \eta_{gb}} \cdot \frac{1}{\dot{m}_T} = \frac{P_T}{\dot{m}_T} \tag{1.2}$$

The power of the turbine is the measured power of the generator divided by the efficiency of the generator and the efficiency of the gear box ($\eta_{gen} = 94.6\%$ and $\eta_{gb} = 99.2\%$ respectively):

$$P_T = \frac{P_{gen}}{\eta_{gen} \cdot \eta_{gb}} \tag{1.3}$$

With these values we are able to calculate the turbine efficiency in equation 1.1 and to determine the thermodynamic state at point 4.

The enthalpy $h_{3''}$ and $s_{3''}$ can be determined as $h_{3''} = f(P_{3''}, T_{3''})$ and $s_{3''} = f(P_{3''}, T_{3''})$ by measuring the temperature and pressure in point 3" and then calculating the enthalpy and entropy, respectively, using the Refprop software. The enthalpy at point 4s, is a function of the entropy at point 3" and the pressure measured at point 4, $h_{4s} = f(s_{3''}, p_4)$. The following list contains an overview of all variables and measuring points:

- $T_{3''}$ = measured turbine inlet temperature (Measurement system: **FI10-02**)
- $p_{3''}$ = measured turbine inlet pressure (Measurement system: **PS10-03**)
- p_4 = measured turbine inlet pressure (Measurement system: **PI10-12**)
- $\dot{m}_T$ = measured propane mass flow through the turbine (Measurement system: **FI10-01**)
- Bypass valve opening (measurement 11PRV01)
- P_{gen} = measured generator power (Measurement system: **GPC-3 from DEIF**)
- $h_{3''} = f(p_{3''}, T_{3''})$
- $s_{3''} = f(p_{3''}, T_{3''})$
- $h_{4s} = f(s_{3''}, p_4)$

For the three test days, the previously mentioned thermodynamic properties were calculated for each state point as well as the turbine efficiency according to equation (1.1). The first calculations showed larger deviations with non-physically high efficiencies. The problem is that a systematic error of 1 K in the temperature measurement could cause an enthalpy deviation of 10 kJ/kg at 5200 kPa, 20 kJ/kg at 4800 kPa, or even 70 kJ/kg at 4400 kPa. It is concluded that under these conditions it is difficult to accurately measure the enthalpy at the turbine inlet with the sensors used.

To solve this problem in calculating enthalpy and entropy due to the measurement systems near the critical temperature point, the data at point 3 is taken and the properties at point 3" are calculated instead. Since the valve can be considered isenthalpic, the enthalpy at point 3" is the enthalpy at point 3 minus the heat losses.

Equation (1.4) determines the heat loss between state point 3 and 3". The experimental data show that the working fluid is near the critical point and this increase the heat loss.

$$\dot{Q}_{loss3-3''} = (h_3 - h_{3''}) \cdot \dot{m}_T \tag{1.4}$$

In the Stodola-equation Strauß (1998) equation (1.5), the index T1 denotes the state before the turbine, and the index T2 denotes the state after the turbine. In addition, the variables indexed by 0 denote the design condition. The cone law states that if the mass flow rate deviates, the pressure difference between the turbine inlet and outlet changes. Thus, if a pressure retaining valve is assumed upstream of the turbine with isenthalpic expansion, a different state between the pressure retaining valve and the turbine can be calculated. This state is determined by the enthalpy upstream of the pressure retaining valve and the pressure according to equation (1.5). Since the temperature in the pressure retaining valve changes during the isenthalpic expansion, but it is needed to calculate the pressure in Eq. (1.5), the state must be determined iteratively.

$$\left(\frac{\dot{m}_T}{\dot{m}_{T,0}}\right)^2 = \frac{p_{T1}^2 - p_{T2}^2}{p_{T1,0}^2 - p_{T2,0}^2} \frac{T_{T1,0}}{T_{T1}} \tag{1. 5}$$

4. RESULTS

The analysis of the different test runs of each day under steady-state conditions shows on which parameters the efficiency depends.

Turbine efficiency analysis

Stationary points were defined with a time span of 2 to 3 minutes, with a very small variation of less than 2%. The following Fig.5 shows the turbine efficiency as a function of time, and the diagram also includes the error bars calculated using the calculated error propagation.

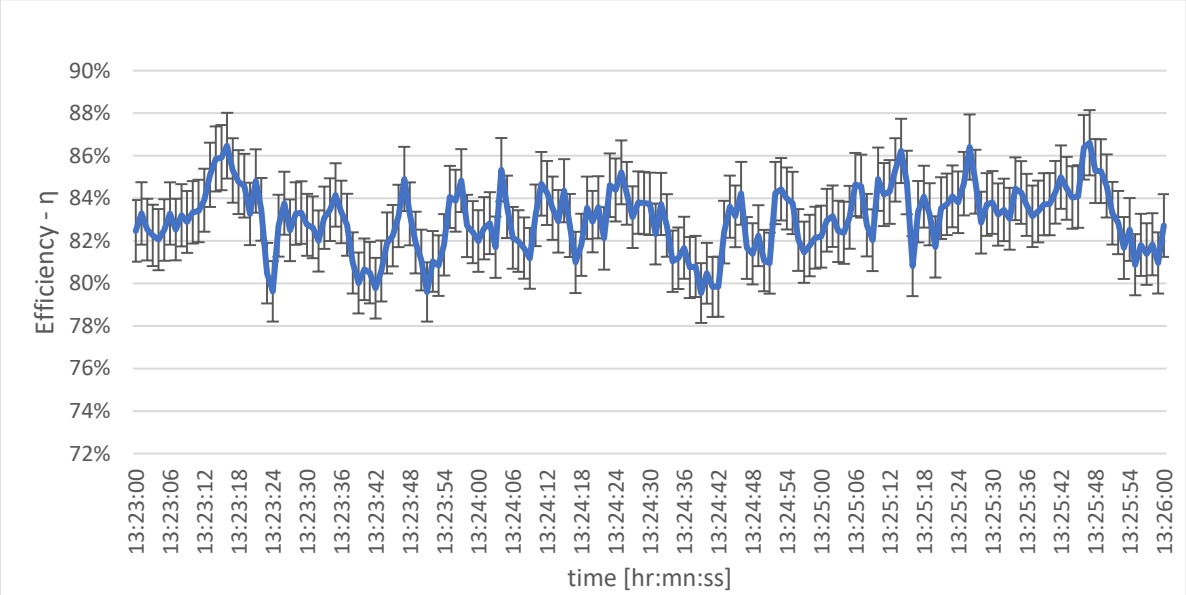

Figure 5: Turbine efficiency vs time in steady state condition calculated wit eq.1.1 - 2° day, run 2.3 calculated with eq. 1.1

Fig 6 shows that the efficiency decreases with increasing mass flow. This behavior of the turbine is unexpected and can be explained by the necessary part-load operation of the turbine and the resulting higher steam quality at the turbine outlet.

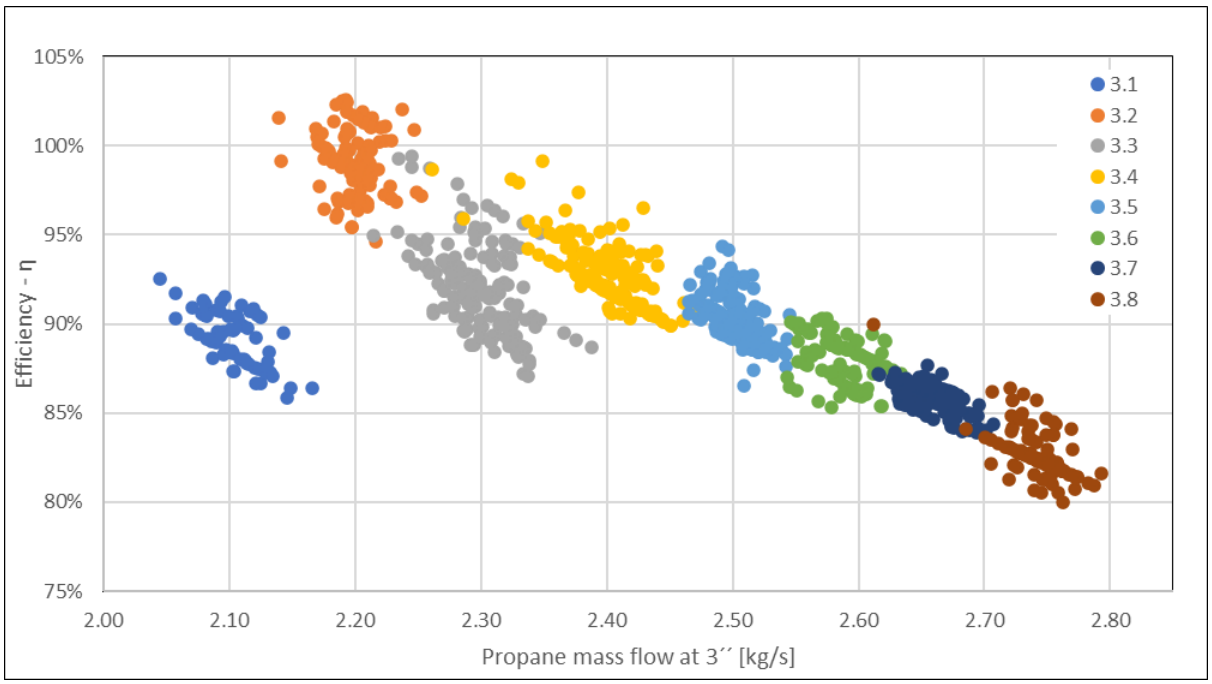

Figure 6: Turbine efficiency vs. Propane mass flow

The temperature values at point 3'' are close to the critical point, the enthalpy calculation has high systematic errors. The range of this error was higher on all days in points 3.1, 3.2, and 3.3 (2.4%, 3.5%, and 5.5%, respectively) and was in the range of 1.6% for the other runs.

Multiple regression was used to analyse turbine efficiency as a function of mass flow and pressure. The objective of this multiple regression analysis was to use the independent variables mass flow $\dot{m}_T$ and pressure $p_{3''}$, whose values are known, to predict the unknown value of turbine efficiency.

Multiple correlation was performed using MATLAB's Least-Squares Fitting application (Curve fitting Toolbox™ software).

With the data from the first day, we performed the fitting using the Curve Fitting Toolbox™, with the best results obtained using linear multiple regression. Figure 7 shows a polynomial selection LAR with degree 1 for mass flow and 1 for pressure, where R^2 0.9930 and $RMSE$ =0.0047.

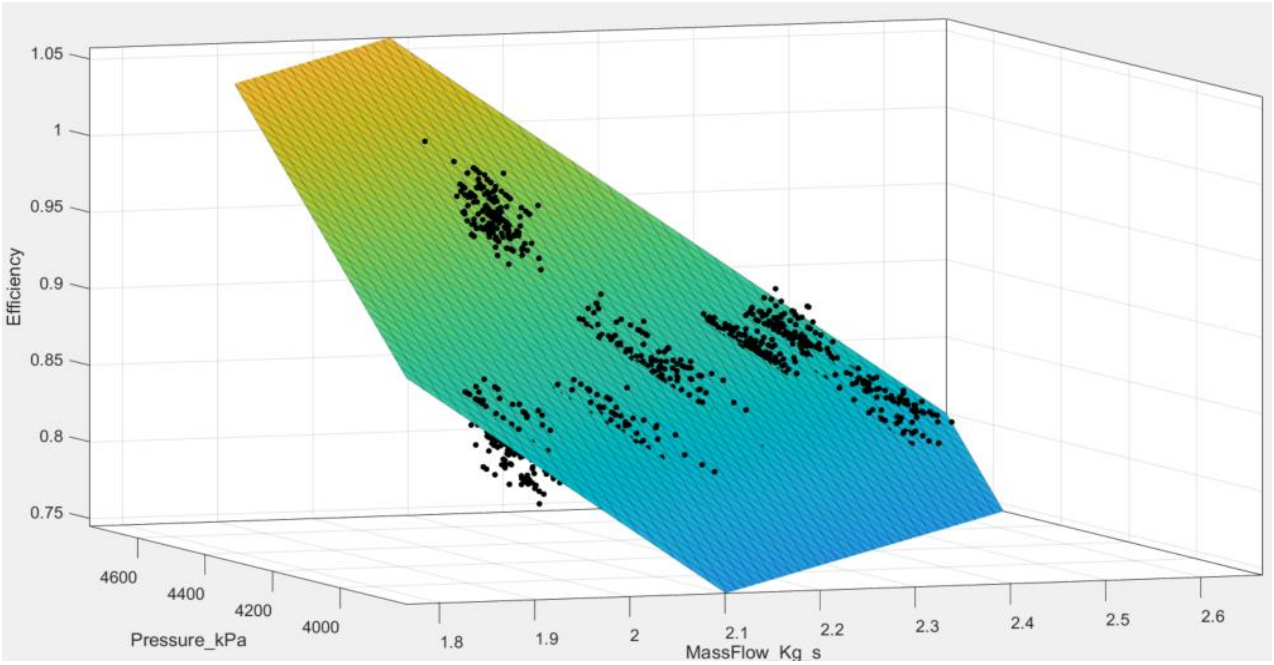

Figure 7: Polynomial with mass flow = 1 degree and pressure = 1, LAR selection – 1st day

Considering the adjustment of the first two days and after discarding the third day, since the values were very close to the critical temperature of the working fluid, the formula for the efficiency correction was calculated with the software. We are looking for a

linear equation for two variables to keep the errors small for measured extreme values. The following equation describes the turbine efficiency.

$$\eta_c = 0.4412 - 0.4399 \cdot \dot{m}_T + 0.0003229 \cdot p_{3''} \quad (2.1)$$

The equation is valid within the following limits of application:

Mass flow: 2.10 $< \dot{m}_T <$ 2.6 [kg/s]

Pressure: 3860 $< p_{3''} <$ 4640 [kPa]

Temperature: 363.5 $< T_{3''} <$ 374 [K]

The software also brings two planes to have the 95% of confidence bounds:

$$\eta_{c,lowerlimit} = 0.4338 - 0.4457 \cdot \dot{m}_T + 0.0003184 \cdot p_{3''} \quad (2.2)$$

$$\eta_{c,upperlimit} = 0.4486 - 0.4342 \cdot \dot{m}_T + 0.0003275 \cdot p_{3''} \quad (2.3)$$

With the unit of $\dot{m}_T$ in kg/s and of $p_{3''}$ in kPa.

$$\dot{m}_T = \sqrt{F} \cdot \sqrt{\frac{p_{3''}^2 - p_4^2}{T_{3''}}} \quad (2.4)$$

Considering that equation (2.4) can be written as a linear equation as $y = ax + b$, where $\dot{m}_{3,,} = y$, $\sqrt{F} = a$ (where the square roots of the constants as $\sqrt{F}$ = 0.010622 $\left[\frac{Kg \cdot K^{\frac{1}{2}}}{s \cdot kPa}\right]$) and $\sqrt{\frac{p_{3''}^2 - p_4^2}{T_{3''}}} = x$, and b is a constant when pressure difference is equal to 0.

The following equation shows the corrected Stodola's law, whereas Figure 8 shows the differences between the ideal Stodola´s law (eq.1.5 or 2.4) and the real Stodola´s law (eq.2.5)

$$\dot{m}_T = C * \sqrt{F} \cdot \sqrt{\frac{p_{3''}^2 - p_4^2}{T_{3''}}} + C' \quad (2.5)$$

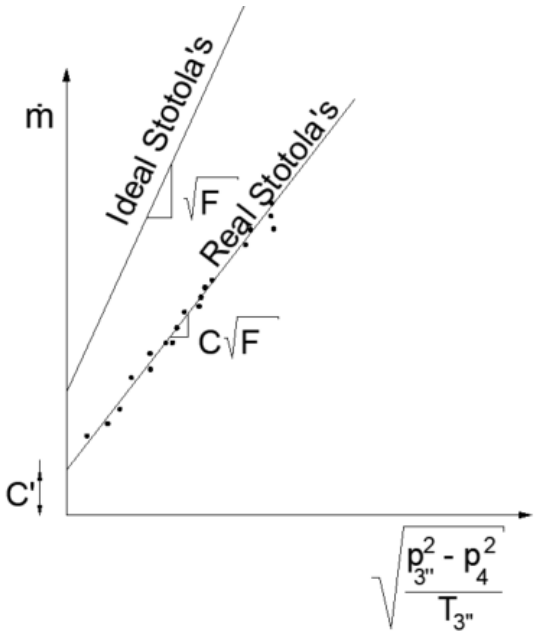

Figure 8: Differences between ideal Stodola's law and Corrected Stodola´s law

The variables C and C' can be solved with a linear regression analysis, which results:

- C = 1.5442
- C' = -1.3352 kg/s

5. CONCLUSION

The aim of this study was to understand the behavior of the propane turbine used in the MoNiKa power plant. For a more detailed analysis, the work was divided into different sections, such as the simulation, the test runs and the data analysis with its results.

The measured values of pressure and temperature at the turbine inlet (3") were very close to the critical point, due to the design deviations of the heat exchanger. The calculations of the state points with REFPROP lead to large uncertainties.

Thus, it is difficult to accurately determine the enthalpy at the turbine inlet under these boundary conditions. To avoid calculations with large errors, the calculation was performed with measured data upstream of the turbine control valve, where they are not close to the critical point. Together with an estimation of the heat loss, this results in a much smaller calculation error for the enthalpy and entropy values.

Usually, an increase in mass flow rate leads to an increase in turbine efficiency. However, from the calculations, in this particular case, an increase in mass flow rate between 2.1 and 2.6 kg/s and pressure from 3.86 to 4.64 MPa, decreases the turbine efficiency. This behavior could be due to increased vapor quality at the turbine outlet. Further studies are needed to investigate the turbine flow in more detail. With the corrected Stodola-equation and the turbine efficiency equation, it is now possible to calculate the turbine characteristic field with simulation programs. These models can then be used as the basis for upscaling to power classes that become relevant for geothermal power plants.

REFERENCES

Vetter C, Wiemer H-J, Kuhn D.: Comparison of sub- and supercritical Organic Rankine Cycles for power generation from low-temperature/low-enthalpy geothermal wells, considering specific net power output and efficiency, Applied Thermal Engineering 2013, 51(1-2), 872–3.

Vetter C.: Thermodynamische Auslegung und transiente Simulation eines überkritischen Organic Rankine Cycles für einen leistungsoptimierten Betrieb, Karlsruhe, KIT, Dissertation, 2014, Karlsruhe, KIT Scientific Publishing, 2014.

REFPROP program Vers.9.0: Available from https://pages.nist.gov/REFPROP-docs/.

Strauß K. Kraftwerkstechnik: zur Nutzung fossiler, regenerativer und nuklearer Energiequellen, 4th ed., Springer; 1998, ISBN: 3-540-64750-3.

Liu C., Zhang C., Xu X., Li Q., Wang S.: Energetic, exergetic, economic and environmental (4E) analysis and multi-factor evaluation method of low GWP fluids in trans-critical organic Rankine cycles, Energy 168 2019 332-345

Kuhn D.: Modular Low Temperature Cycle Karlsruhe (MoNiKa), March 17, 2021, Available from: https://www.monika.kit.edu/english/.

M+M TURBINE-TECHNIK: Turbinenanlage Propanexpander, Projectmanual 1 15 3514 0 2018, (2015)

Mardon Pérez J.: Experimental examination of the MONIKA-ORC Turbine and comparison of the results with thermodynamical calculation, Master thesis – KIT, 2022