Proceedings World Geothermal Congress 2020+1
Reykjavik, Iceland, April - October 2021

Exploration and Analysis of Technical Transformation on Old Geothermal Reinjection Systems in the Central City of Tianjin

Shen Jian, Zhao Yanting, Liu Donglin

Tianjin Geothermal Exploration and Development-Designing Institute，No.189 Weiguo Road, Hedong District, Tianjin

Email: shenjian0216@hotmail.com

Keywords: geothermal resources, reinjection, bedrock heat reservoir, water filtration, acidification

ABSTRACT

Some geothermal reinjection wells in the central city of Tianjin have been used for a long time, and plugging is a common phenomenon, even inject flowrate attenuation in a lot of reinjection wells. In order to enhance the reinjection ability of wells, technical transformation had been carried out on old geothermal reinjection systems by acidifying well, install filtration equipment which can effectively prevent physical plug of reinjection, alleviate attenuation of reinjection amount, increase the rate of reinjection, through these measures the old reinjection well can meet the needs of two production wells, which create a new way to solve the single production in Tianjin.

1. INTRODUCTION

Tianjin is abundant in sedimentary basin-type medium to low temperature geothermal resources which has been developed and used for nearly 80 years. Since the expansion of development and utilization, the reservoir pressure of geothermal resources has been continuously reduced, especially in the central urban area where geothermal is concentrated mining. Due to the large number of geothermal wells, a relatively obvious thermal storage pressure drop funnel has emerged (Wang Liancheng, et al., 2009). The continuous decline of water level directly affects the sustainable development and utilization of geothermal resources. For many years we have explored a series of new technical methods on geothermal development and utilization at home and abroad, and the most important of which is reinjection (Zhao Sumin, et al., 2013). Therefore, to maintain the pressure of reservoir in the downtown area of Tianjin, the intensity of geothermal reinjection should be increased, and measures should be taken to solve the problem of single production wells.

Most of the geothermal single wells in the central urban area were drilled long time ago. With the development of urban construction in recent years, it is difficult to rebuilt reinjection wells for single wells, because most of them are subject to economic, construction sites and geological structures (Wang Liancheng, et al., 2008). Therefore, if these wells are fully utilized, reasonable resource integration will be carried out among those single wells with conditions, and the original reinjection system for wells will be transformed into a two-in-one irrigation system, which avoids siting new reinjection well, drilling cost, meantime achieve the purpose of reinjection. In recent years, Tianjin has built more than 100 wells reinjection systems by adopting the development and utilization mode of one production and one reinjection well. Through monitoring data analysis, the operation of the wells is generally good. But the operation time of the wells is so long, then plugging is common, and the reinjection ability of many wells has reduced, making it difficult to meet the higher standard of two-in-one system. Therefore, it is particularly important to carry out technical transformation of these old-fashioned reinjection wells and improve their capacity. Wumishan Formation reservoir is the main target layer of these reinjection wells, which are mainly analyzed.

2. MAIN PLUGGING FACTORS OF GEOTHERMAL REINJECTION WELLS

2.1 Suspended matter

Suspended matter usually refers to solid matter in water that does not dissolve in water and does not pass through the filter (Lin Li, et al., 2008). The clogging of suspended solids is an important factor affecting reinjection: the suspended solid particles are filled into the reservoir with the reinjection fluid and then cemented with the dolomitic, gray matter and mud, results clogging in reservoir. In addition, in the long-term use of geothermal wells, the corrosion of pipeline and casing will flow into the aquifer with the reinjection fluid, which is also an important factor causing the blockage of the reinjection well.

2.2 Chemical precipitation

The chemical precipitation of geothermal fluid is one of the important factors affecting the reinjection. Through the identification of the precipitant of some fluid in the Wumishan Formation geothermal wells, the main components of the precipitation include $CaCO_3$, SiO_2, Fe_2O_3 and other compounds. The main elements are O, Si, Fe, Al, Fe, etc. (Wang Liancheng, et al., 2007).

During the mining-recharging process, the chemical composition in the geothermal fluid changes due to the temperature and pressure variation:

(1). A fluid with a higher HCO_3- content will undergo a chemical reaction of the formula (1) to release a certain amount of CO_2 gas, thereby producing a $CaCO_3$ or $MgCO_3$ precipitate:

$$Ca^{2+}(Mg^{2+})+2HCO_3=Ca(Mg)CO_3+H_2O+CO_2\uparrow \quad (1)$$

(2). The precipitation of SiO_2 is mainly soluble SiO_2. When the temperature is lower than 250 °C, its solubility in hot fluid has a linear correlation with temperature. Various forms of cooling process will lead to precipitation.

(3). Fe oxidation produces Fe_2O_3 precipitation. Therefore, there is a overlap between suspended solids and chemical plugging. The suspended matter contains compound components, and the chemical reaction products are mostly in the form of suspended solids.

3. TECHNICAL TRANSFORMATION METHOD AND ENGINEERING EXAMPLE IN OLD GEOTHERMAL REINJECTION SYSTEM

3.1 Acidification

3.1.1 Working principle

Acidification is a technological measure to improve permeability of the thermal reservoir by the chemical dissolution of acid and the hydraulic action when the formation is squeezed with acid. The acid injection pressure is higher than the crack pressure of the reservoir. The acid simultaneously exerts chemical action and hydraulic power, and expands, extends, fractures and communicates cracks, forms a seepage channel with long extension and high circulation capacity (Chen Taoping, et al., 2000).

In the past, this method has been applied to increase capacity of geothermal wells in carbonate thermal reservoirs, and now it becomes deblocking treatment of geothermal reinjection wells gradually. During the reinjection process, In the geothermal reinjection well, due to the pressure of the recirculating fluid, the contaminants are pressed more and more densely, the resistance is also increasing by the fluid, and the reinjection is gradually attenuated. In the case of the reservoir with lots of fractures, the acid fracturing method can effectively improve the productivity of geothermal wells, especially in the construction and treatment of reinjection wells, which is extremely important for improving the reinjection. It is effective to improve the service life of geothermal wells and maintain the sustainable development of geothermal resources (Wang Liancheng, et al., 2008).

In the acid pressure treatment, the main working medium is hydrochloric acid, which enters the gap of the thermal reservoir and will chemically react with the rock wall. Taking the main components - calcite ($CaCO_3$) and dolomite ($CaMg(CO_3)_2$) as an example, the main chemical reaction after acid injection (Zhi Hai and Dai Yong, 2005) is described. The chemical reaction equation is:

$$CaCO_3+2HCl=CaCl_2+CO_2\uparrow+H_2O \quad (2)$$

$$CaMg(CO_3)_2+4HCl=MgCl_2+CaCl_2+2CO_2\uparrow+2H_2O \quad (3)$$

It is known that after the acid pressure treatment, a large amount of carbonate rocks in the reservoir are dissolved, which increases the spatial volume of the crack, thereby facilitating the smooth passage of the reinjection channel.

3.1.2 Project examples

Taking the HX-33 well reconstruction project as an example (Niu Weida, et al., 2015), The well locates in Hexi District and was completed in 1997. The target reservoir layer is Wumishan Formation. The geothermal well is 2762m deep, and the thickness of reservoir is 460m. The outflow temperature is 81°C, and the water outflow rate is 100m_3/h. HX-33 is the reinjection well of HX-24 at the same layer. The purpose of this transformation is making the adjacent HX-31 well into the system. The geothermal tail water of HX-31 well is connected to the system to form an operation mode of two production and one reinjection.

However, according to the reinjection test data of HX-33 well (see Table 1) and the analysis of dynamic monitoring data for many years, it is difficult to meet the reinjection demand of two production wells. After analysis, we decided to improve HX-33 well's reinjection capacity by reforming acidification washing technology.

Table 1 Reinjection test data table of HX-33 well before acidification

Test group Stable	Stable reinjection volume（m^3/h）	Reinjection water temperature (℃)	dynamic water level(m)	Stable Stabilization time (h)
First group	80	48	81.0	26
Second group	110	48	58.0	12

1. Acidification washing process and parameters

(1) Acidizing process: hydrochloric acid pressure process;

(2) Squeeze method: positive squeeze;

(3) Concentration: 22%;

(4) Squeeze pressure: ≤ 20 MPa;

(5) Acid removal mode: vaporized water is acid-discharged.

2. Review of acidification well quality

Through acidification and washing of HX-33 well, the scale attachment and deposits on the inner wall of the casing were cleaned, which expanded the fracture width of the Wumishan Formation effectively and extended the reservoir fissure. The reinjection test

(see Table 2) verified that the effect of the well was increased by 67%, thus meeting the reinjection requirements of the two mining wells in the future.

Table 2 Reinjection test data table of HX-33 well after acidification

Test group Stable	Stable reinjection volume（m^3/h）	Reinjection water temperature (℃)	dynamic water level(m)	Stable Stabilization time (h)
First group	83	48	117.0	41
Second group	126	48	101.0	43
Third group	158	48	81.0	72
Fourth group	184	48	60.0	72

3.2 Adding filter equipment

3.2.1 Working principle

It is found that the influencing factors are extremely complicated by study and analysis of the causes of plugging in reinjection wells. Among them, solid suspended particles and chemical precipitation are the main causes of the attenuation of reinjection. So to keep the reinjection water clean, reducing the suspended solids and chemical precipitation are the key technologies to solve the blockage. Therefore, the reinjection water should be filtered and purified to remove the solid matter of the suspended solids with large particles to ensure the reinjection, especially for the geothermal reinjection tail water that requires long-distance pipeline.

3.2.2 Project examples

Taking the HD-26 well reconstruction project as an example (Shen Jian, et al., 2014), the HD-26 geothermal is a single production well mainly used for heating and about 150,000 m^3 of geothermal tail water is directly discharged every year, causing a great waste of resources. There is a geothermal doublet well system nearby, named HD-35, HD-35B, which belongs to the same reservoir of carbonate thermal with similar thermal fluid quality. In order to protect geothermal resources, realize sustainable development. We integrate HD-26 well into the system to form a two-in-one irrigation development and utilization mode. It can reduce tail water discharge and reduce the impact on the environment.

Since the geothermal tail water of the HD-26 well needs to be transported to the HD-35B reinjection well through the 600m steel pipeline, it is necessary to upgrade the reinjection station to ensure the filtration accuracy of the reinjection water quality (as shown in Figure 1).

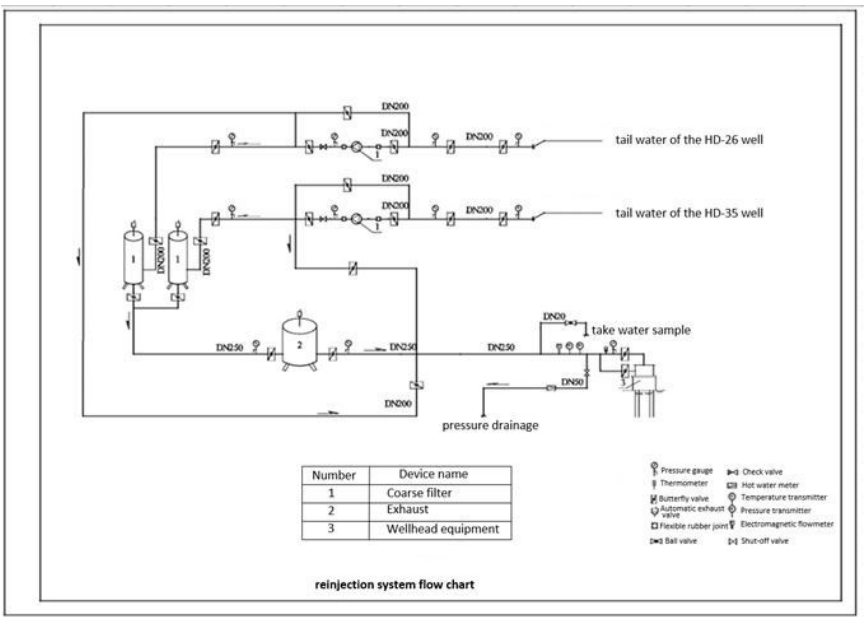

Figure 1: Reinjection system flow chart after upgrading

According to the sampling analysis of the reinjection fluid before and after filtration, the average particle size of the suspended matter in the reinjection fluid of HD-26 well decreased from 263.551 μm (maximum particle size about 411 μm) to 0.792 μm, as Figure 2 Shown. The suspended solids with larger particles are effectively removed.

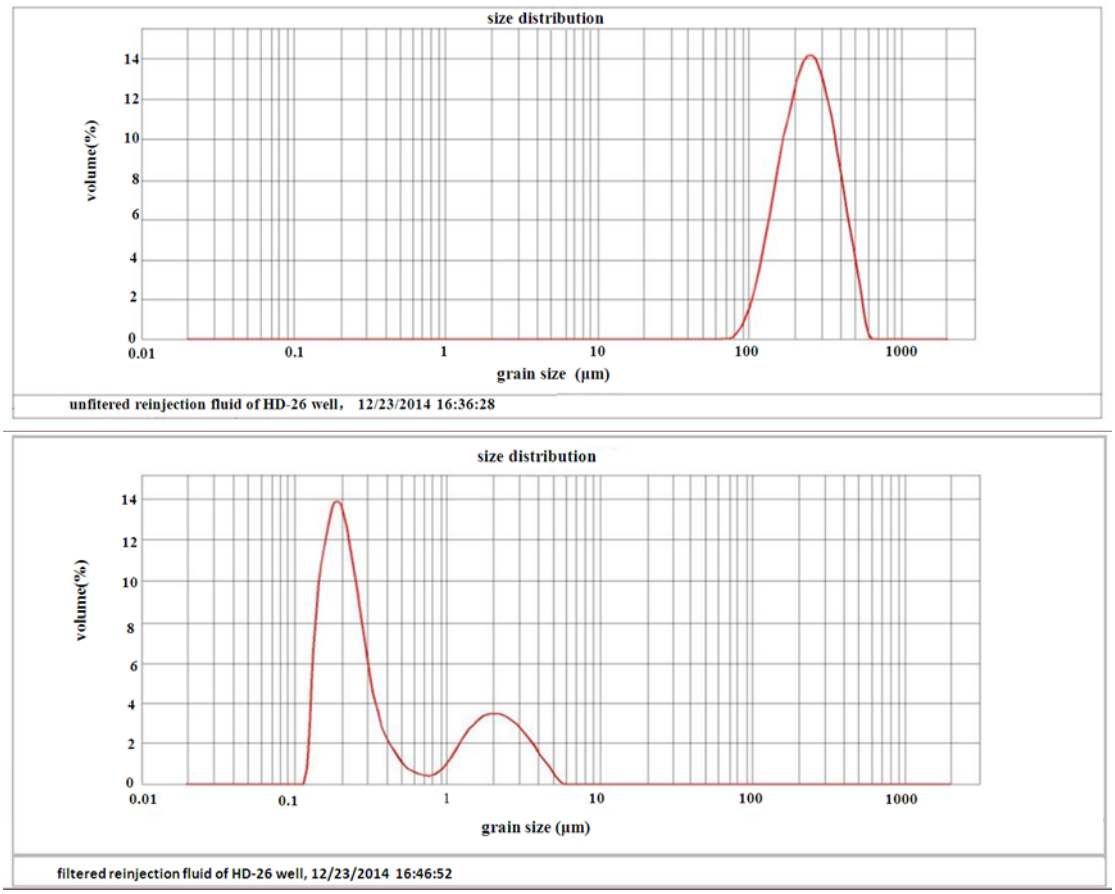

Figure 2: Comparison chart of suspended solids grain size analysis between unfiltered and filtered reinjection fluid

In order to verify the reinjection ability of HD-35B well after the transformation, a reinjection test of about 200 hours was carried out. The duration curve of this test is shown in Figure 3. The stable reinjection amount is 140m^3/h, which is equivalent to the beginning reinjection capacity of HD-35B well. After adding filtration equipment, the HD-26 well's geothermal tail water does not adversely affect the reinjection capacity of HD-35B well and can ensure the long-term stable use of the reinjection system.

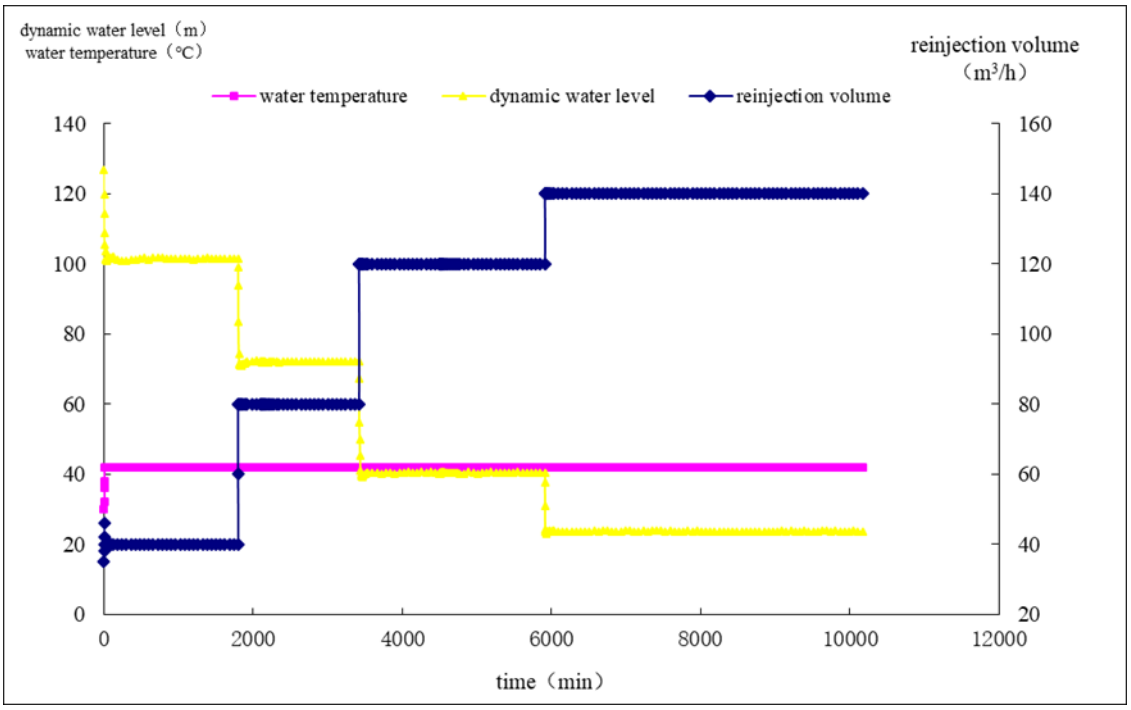

Figure 3: Reinjection test's duration curve of HD-35B well

4. MAIN CONCLUSIONS

In order to achieve the sustainable development of geothermal resources, the geothermal reinjection should be increased in the downtown area of Tianjin, and measures should be taken to solve the reinjection problem of existing geothermal single wells, but the reinjection wells are often affected by the economy, construction sites, geological structures and other conditions ,which is difficult to implement. Therefore, integrating geothermal single wells with existing old reinjection systems is a feasible method. In order to ensure the reinjection capacity of these old reinjection systems, acidification washing and adding filtering equipment are usefully according to engineering experience. Thus the old reinjection system can avoid physical clogging, reduce the amount of reinjection attenuation, increase the reinjection rate, and maintain the continuous and effective operation of the reinjection well to meet the higher standard of two-in-one irrigation.

REFERENCES

Wang Liancheng, Lin Li, Wang Kun, et al.: Research Report on Reinjection Development Layout and Resource Integration Planning of Geothermal Concentrated Mining Area, *report,* Tianjin Geothermal Exploration and Development-Designing Institute (2009).

Zhao Sumin, SUN Baocheng, LIN Li, et al.: Exploration, development and utilization of sedimentary basin geothermal field, Beijing: Geological Publishing House, (2013)

Wang Liancheng, Zhao Na, Shen Jian, et al.: Tianjin Key Geothermal Field Reinjection Distribution Planning Research Report, *report,* Tianjin Geothermal Exploration and Development-Designing Institute (2008).

LIN Li, WANG Lian-cheng, ZHAO Su-min, et al.: Influencing factors of geothermal fluid reinjection in pore thermal reservoirs in Tianjin area, *Hydrogeology and Engineering Geology*, **35**, (2008), 125-128.

Wang Liancheng, Lin Li, Lin Jianwang, et al.: Research on Geothermal Reinjection System Engineering Construction and New Technology Application, *report,* Tianjin Geothermal Exploration and Development-Designing Institute (2007), 46-48.

Chen Taoping, et al.: Petroleum Engineering, Petroleum Industry Press, (2000), 407-408, 417-418.

WANG Liancheng, LI Ming-lang, CHENG Wan-qing, et al.: Application of acidized fracturing method in carbonate thermal reservoir, *Hydrogeology and Engineering Geology*, **37**, **(**2008), 128-132.

Zhi Hai, Dai Yong.: Current status and prospects of acid pressure technology in deep carbonate reservoirs, *Oil Drilling Technology,* **33**, (2005), 58-61.

Niu Weida, Wang Huaijing, Xu Yunpeng, et al.: Summary Report on Geothermal Resource Protection Project of HX-31 Well and HX-33 Well in Hexi District Tianjin, *report,* Tianjin Geothermal Exploration and Development-Designing Institute (2015).

Shen Jian, Wei Yongmin, Zhao Yanting, et al.: Summary Report on Geothermal Resource Protection Project of HD-26 Well, HD-35 Well and HD-35B Well in Hedong District, Tianjin *report,* Tianjin Geothermal Exploration and Development-Designing Institute (2014).