Proceedings World Geothermal Congress 2020+1
Reykjavik, Iceland, April - October 2021

Potential Development of a Binary Power Plant for Chiweta Geothermal Field in Malawi

Tufwane Mwagomba

Malawi Energy Regulatory Authority (MERA), Private Bag B-496, Lilongwe 3, MALAWI

tufwane@gmail.com

Keywords: Pre-feasibility study, electricity generation, Binary technology, Organic working fluid

ABSTRACT

Malawi continues to experience insufficient electricity generation capacity as demand for electricity keeps growing. This has led to low electrification rate and low per capita consumption of electricity. As such, Malawi is in search of alternative sources of energy to complement the current predominant hydro generation.

Having manifestation of geothermal in some parts of the country, geothermal energy is being considered for development to complement a diverse national energy mix.

By virtue of its location in the western branch of the East African Rift System, developing of geothermal in Malawi for electricity generation can focus on utilizing binary technology, a technology which has become a preferred means of exploiting medium to low enthalpy geothermal resources around the world. Pre-feasibility study done this far has revealed that Chiweta geothermal field is promising for development in Malawi with an indicative subsurface temperature of up to 135°C at a depth of about 750m. The study further proposed an electric potential of 15 MW for Chiweta geothermal prospect using binary technology. This paper proposes a 10 MW binary power plant for a start, using the geothermal water of the field. The capacity of the power plant can be scaled depending on data from the area as power production is carried out.

Technical analysis of the binary power plant has been assessed using Engineering Equations Solver (EES) software for thermodynamic properties of the fluid. Technical performance of a wet cooled basic binary is proposed for the promising Chiweta field which would generate a net power 10 MW for the national grid of Malawi.

1. INTRODUCTION

Malawi is a country in south-eastern Africa bordering Tanzania in the north and northeast; Mozambique in the east, south and south west; and Zambia in the west and northwest. It covers a total area of 118,484 sq.km with a population of about 17.5 million people (NSO report 2018). As a country defined as a growing economy, demand for electricity is ever increasing in Malawi. Currently, Malawi has an installed capacity of about 482 MW predominantly from hydro (World Bank, 2019). The country has not consolidated its off-grid systems yet, but there have been notable strides in off-grid power systems of late. As such the grid connected access to electricity stands at almost 11% with urban areas connected at 42% while the rural areas at approximately 4%. Government of Malawi plans to connect 30% of Malawi's population to electricity by the year 2030. The current forecasted suppressed demand of grid electricity is 550 MW thereby posing an insufficient generation capacity challenge. With a bigger potion of generation coming from hydro, Malawi's electricity is exposed to hydrologic variability with floods and drought affecting availability of electricity. In 2015, hydrologic variations affected electricity supply to the point of prolonged load shedding of up to 12 -16 hours in a day (World Bank, 2019). Malawi's energy consumption per capita is very low, around 100 kWh per year, against the world average of 2,500 kWh/year.

To improve the situation, government of Malawi, through the department of energy affairs, reviewed the Malawi Energy Policy. The policy provides some guidelines for developing energy in Malawi after noting that the country was predominantly relying on biomass as a source of energy (DoE, 2003) as well as hydro for electricity. The policy sought for alternative ways of diversifying energy sources other than heavily depending on biomass which leads to environmental degradation. With the intermittent electricity supply coming from insufficient generation capacity, Malawi is looking forward to exploiting alternative electricity sources that will complement hydro and geothermal is one of them.

The Country is within the Great Rift Valley which extends from Djibouti to Mozambique and lies at the southern end of the western branch of the East African rift system. Located within the East African Rift System, Malawi manifests its geothermal resource through hot springs. From the studies done, unpublished reports stipulate that Malawi geothermal manifests in hot springs that are located mostly along or near intersections of major faults. There are over 50 hot springs that have been identified and documented and some of them have their water studied for geochemistry to understand the nature of reservoir, their temperature and the origin of the water in the system. Surface temperatures of these hot springs have been between 28° and 79°C. Studies that were done in 2010 by GDC of Kenya, Malawi's hot springs had surface temperatures recorded at 79°C in Chiweta geothermal prospect (GDC - Kenya, 2010). Geothermal resource in Malawi has not been exploited. Further geochemistry studies suggest that most of the water, with some isolated exceptions, are immature which have not attained equilibrium thereby presenting some degree of uncertainty in geothermometry. This might be either as a result of thermal water mixing with ground fresh water or that the system is permeable and fast recharging.

With the availability of geothermal, Malawi can develop the resource for various utilization processes. The process of geothermal development is long and requires synergy various disciplines and professions to bring geothermal concept into reality. This paper therefore discusses the proposal of developing geothermal binary power plant at Chiweta, which is one of Malawi's geothermal fields, in order to complement the current hydro generation capacity.

2. MALAWI AND THE EARS

The East African Rift System, which is causing the continent of Africa to experience a divergent plate boundary along the rift, extends from Afar triple junction in Djibouti to Beira in Mozambique and is divided into three branches; the eastern branch, the western branch and the south-eastern branch (Figure 1). Malawi lies on the southern end of the western branch of the rift system.

The East African rift system is a series of adjacent individual tectonic basins (rift valleys), separated from each other by relative shoals or uplifted ridges and generally bordered by uplifted shoulders (Hardarson, 2014). The eastern branch has been studied to be more volcanically active than the western branch which is paucity of volcanism (Omenda, 2013). The Western branch runs over a distance of 2100 km from Lake Albert in the north, to Lake Malawi in the south with several segments: the northern segment includes Lake Albert, Lake Edward and Lake Kivu basins; the central segment with the basins of lakes Tanganyika and Rukwa whilst the southern segment corresponds mainly to Lake Malawi and small basins further to the south (Hardarson, 2014). Each segment or basin is controlled by faults and forms a subsiding graben or trough. Limited studies have been done on the south-eastern branch, located on the coast of Indian Ocean in the east of Tanzania and Mozambique.

The EARS can therefore be taken as the beginning of opening of an ocean, between two large continental blocks drifting apart, thus separating the main African plate and the Somalian plate. The EARS continues to propagate southward at a mean rate between 2.5 cm/year and 5 cm/year with evidence of seismic activity creating tension and heat (Chorowicz, 2005).

Seismic activities that are continually experienced on some border faults in Malawi indicate that the rift-controlling fault system of the Lake Malawi trough is still active (Eliyasi, 2015). Figure 1 the East African Rift System.

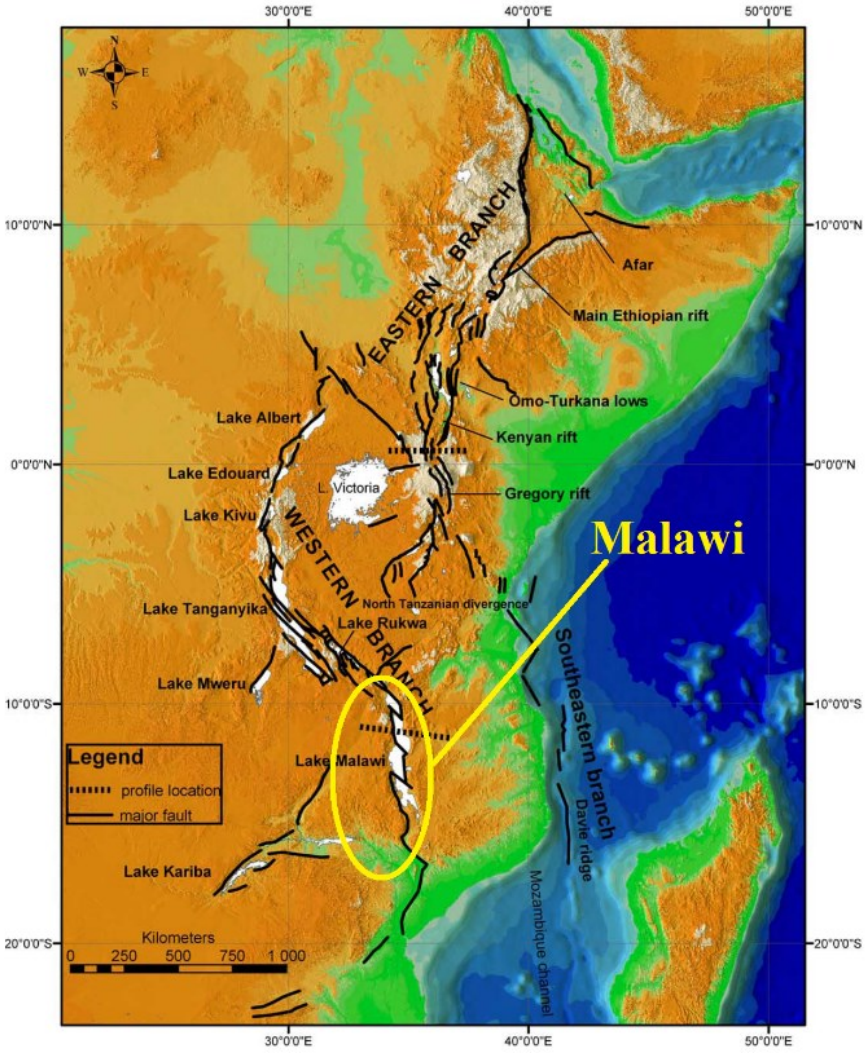

Figure 1: The East African Rift System. Source (Chorowicz, 2005)

Geothermal gradients in the EARS vary along the length of the rift system depending on degree of crustal thinning and volcanic activity. The EARS crustal thinning is related to the lithospheric opening that is occurring in the African continent, which in terms of plate tectonics results from the divergence of large, regional-scale blocks. The rift is at an early stage of development creating some empty basins, some filled with sediments of about 3000 m thick and more, while others filled with volcanic rocks with signs of asthenospheric intrusion (Chorowicz, 2005).

The asthenospheric intrusions in the lithosphere are pronounced along the rift system and are responsible for negative bouguer anomaly along the rift. However, the intrusion is more pronouncing in the north and less pronouncing along the line of EARS propagation towards the south where Malawi is. In Afar region, the crust thickness is around 5 km and the region has high manifestation of geothermal, while moving down south the crust thickness reaches as much as 35 km with sparse geothermal manifestation when compared to the north (Omenda, 2013). The level of upwelling of the asthenosphere coupled with magmatic bodies close to the earth's surface relates to the level of geothermal gradient along the rift, and this is partly the reason why the north, i.e. the eastern branch, of the rift system has higher geothermal gradient than the south of the rift system i.e. western branch. Figure 2 shows the principle of the asthesnospheric intrusion along the EARS in relation to crust thinness.

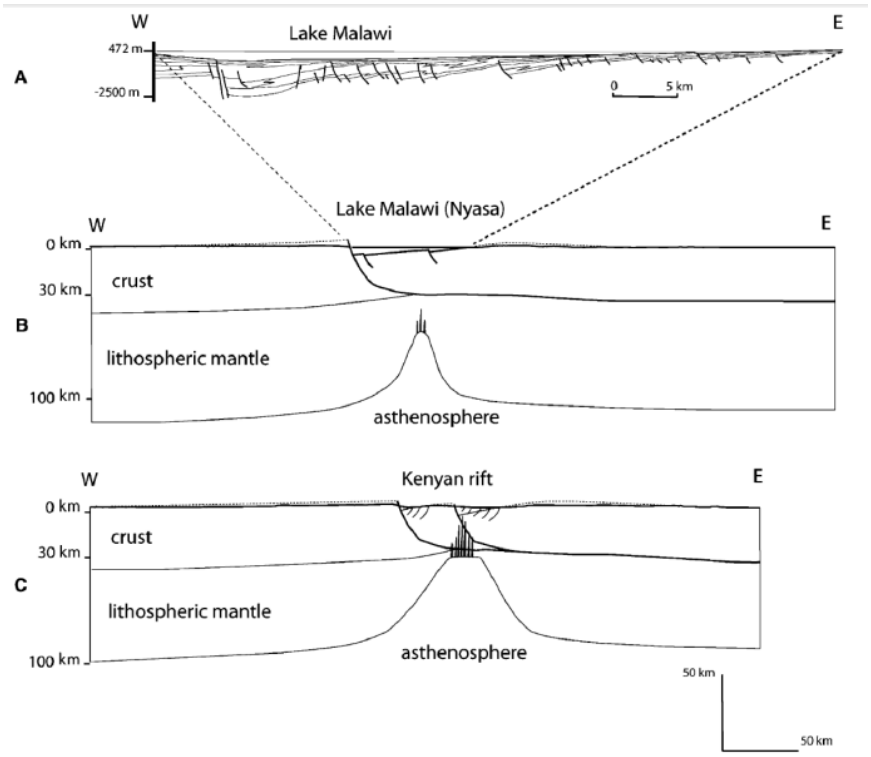

Figure 2: Showing (A) seismic reflection profile for Lake. Malawi, (B) and (C) Inferred lithospheric cross-section of Malawi and Kenya. Source: (Chorowicz, 2005)

3. GEOTHERMAL MANIFESTATION AND STUDIES DONE

Malawi system has lower geothermal gradient and hence a medium to low temperature geothermal system with manifestation of geothermal through hot springs. Malawi has gone up to pre-feasibility stage of geothermal development which was concluded in 2017. The study revealed that Malawi has over 50 hot springs appearing in 24 prospects (DoE, 2018). The location of Malawi's hot springs tend to be along or near intersection of major faults within the rift valley suggesting that the hot springs are controlled by the faults. The spring's geochemistry suggests that most of the water are immature and have not attained equilibrium thereby presenting some degree of uncertainty in geothermometry (GDC - Kenya, 2010). The immaturity of the water may be either as a result of thermal water mixing with ground fresh water or that the system is permeable and fast recharging. However, subsurface temperature studies done using sodium potassium (Na-K) geothermometers have indicated a temperature range of 116º - 142ºC for the hottest prospect which is Chiweta at a depth of about 750m and 52º - 93ºC for the lowest prospect (DoE 2018). The Na-K geothermometry gives a good indication for surface exploration that there is a resource in Malawi. However, more study is encouraged through sub-surface exploration to confirm the resource's variability.

4. GENERAL DESCRIPTION AND POWER PLANT MODELING FOR CHIWETA GEOTHERMAL FIELD

Located at coordinates 10° 13′S and 34°16′ E at an altitude of about 480 masl, is Chiweta one of local trading centres in the northern part of Malawi. Chiweta is located within the deep seated border fault which acts as a conduit for geothermal water (Eliyasi, 2015) and it hosts the hottest geothermal hot springs recorded so far in Malawi which are located to the immediate north of North Rumphi river, at the edge of Mkerakera hill. Within a distance of 1.5 km to the east of the hot springs lie Lake Malawi as shown in Figure 3 below.

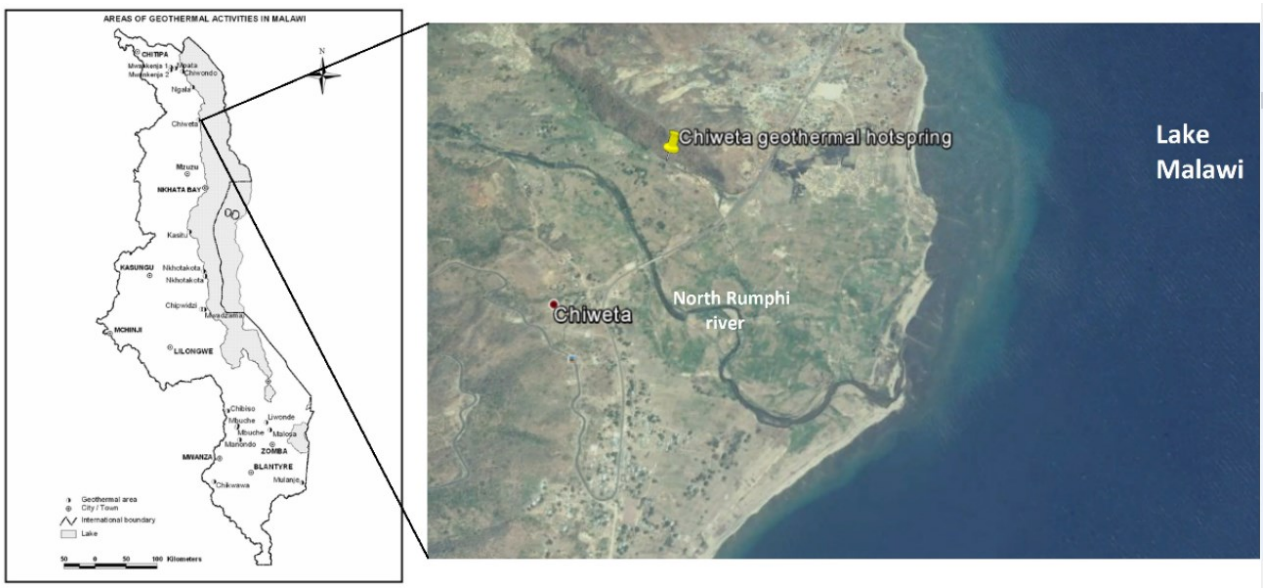

Figure 3: Location of Chiweta hot spring. Source: adapted from (Dulanya, et al., 2010)

The area experiences tropical climate and receives more rainfall in the months of November to April than the rest of the year. The annual average temperatures experienced in the area are around 24.4°C with highest temperatures experienced in November and lowest temperature in July (Climate Data, 2015). The area receives an average annual rainfall of 1081 mm.

The area has a number of hot springs occurring along a line of the E-W fault (Eliyasi, 2015). Some of the hot springs are clearly visible while others discharge beneath a stream called Mphizi. The recent studies have indicated that Chiweta hosts the hottest geothermal hot springs recorded in Malawi, with a surface temperature of 79°C and Na-K geothermometer subsurface temperature of 140°C. However, more studies need to be done for Chiweta to ascertain the extent of field's hydrological system in terms of recharge zones, reservoir and related size subsurface characteristics.

4.2. A 10 MW Power Plant modeling for Chiweta

This paper considers a temperature for Chiweta that is in tandem with the generally experienced geothermal gradient of the western branch of the EARS (Kraml, et al., 2010). The proposed subsurface temperature of 135°C is used so as not to go beyond what was indicated by the prefeasibility study. Since full detailed studies haven't been conducted hence limited field characteristics, it is assumed that production wells are non-artesian with pumping requirement. In this aspect, the pumping assures of geothermal fluid that is kept in liquid phase and thereby acting as a preventive measure in calcite scaling. The pumping parasitic load is accounted for in the total parasitic load of a given power plant. Further work is recommended to validate the reservoir temperature and characteristics of the field though sub-surface exploration.

Fluid gathering system requires field characteristics such as borehole pressure and well discharge from production wells. Since the model considers calcite prevention in a way of maintaining the geothermal fluid in liquid phase, the geo-fluid pressure is kept at slightly above the saturation pressure of the reservoir temperature. The saturation reservoir pressure at 135°C temperature is 3.132 bars. Considering that the fluid may lose some pressure along its path through the system to the reinjection well, consideration is made to keep the fluid from boiling even as it loses pressure in the system. As such 1 bar is added to the saturation pressure of the geo-fluid, hence the considered pressure for geo-fluid in this work is 4.132 bars.

Mass flow of a geothermal field is more dependent on the permeability of the reservoir. Generally, wells drilled in medium to low temperature geothermal field may have the capacity of delivering geothermal liquid of 20 – 60 kg/s (Mannvit - Geoelec, 2012). It is therefore likely that a geothermal well in low to medium temperature may deliver 40 kg/s which is also in agreement with what is considered to be generally acceptable discharge for a well (Verkis Consulting Engineers, 2014). According to the prefeasibility study results, the main hot springs at Chiweta produced about 40 l/s. This paper therefore assumes a well that can deliver 40 l/s and this is the basis of establishing the number of wells required to deliver 10 MWe. The calculated geothermal mass flow is divided by the estimated mass flow of the well (40 kg/s). For every 2 production wells, 1 reinjection well is required (Mannvit - Geoelec, 2012).

The parameters that form boundary conditions for modelling the proposed power plant are therefore given in Table 1:

Table 1: Boundary conditions for power plant modelling

Parameter	*Value*	*Unit*
Working fluid	n-Butane	
Geothermal fluid source pressure	4.132	bar
Atmospheric pressure	0.9495	bar
Vaporizer pressure	12	bar
Condenser pressure	1.466	bar
Geothermal fluid source temperature	135	°C
Condenser temperature	40	°C
Vaporizer-Preheater pinch temperature difference	5	°C
Condenser pinch temperature difference	5	°C
Surface water temperature	23	°C
Ambient temperature for Chiweta	24	°C
Relative humidity for Chiweta	70	%
Fan efficiency	70	%
Feed pump efficiency	80	%
Turbine efficiency	85	%
Generator efficiency	95	%
Motor efficiency (for pump and fan)	95	%
Preheater heat transfer coefficient	1000	W/m^2°C
Vaporizer heat transfer coefficient	1600	W/m^2°C
Recuperator heat transfer coefficient	400	W/m^2°C
Condenser heat transfer coefficient	800	W/m^2°C

Using EES, for the power plant to deliver the required 10MW, it needs a minimum of 510kg/s flow of water. Since the prefeasibility study found that naturally the springs discharged more than 44l/s of water, the required mass-flow can be achieved through pumping of the fluid from the ground through a almost 11 wells.

A process flow diagram for the proposed binary plant is presented in Figure 4 below.

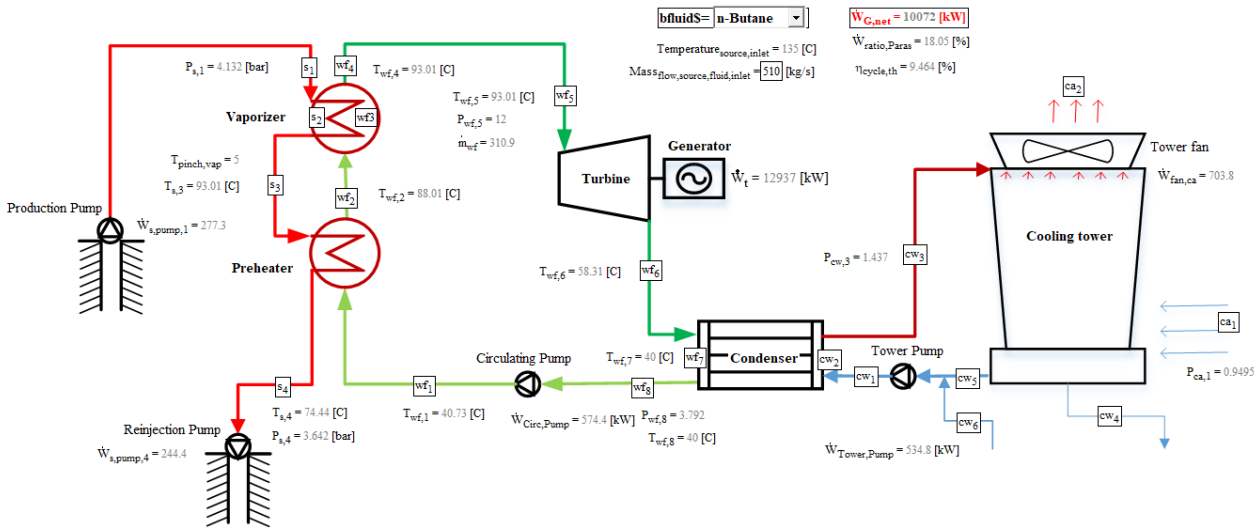

Figure 4: Process flow diagram for wet cooled binary

The performance of the heat exchangers and the condensers of the models are presented below. The heat exchanger i.e. the preheater and the vaporizer have the geothermal fluid entering the vaporizer at station s_1 at temperature 135°C superheating the working fluid with 5°C between stations s_1 and s_2, vaporizing the working fluid at constant temperature between stations s_2 and s_3 and preheating

the working fluid between stations s_3 and s_4 after which it exits the preheater for reinjection. The working fluid coming from the circulation pump at temperature 40°C, enters the preheater at station wf_1 where it is heated to a liquid saturation temperature at the pressure of 12 bars between stations wf_1 and wf_2. The fluid gains a temperature of 88.01°C at station wf_2, is then vaporized between stations wf_2 and wf_3 until it becomes saturated vapour at station wf_3. Between stations wf_3 and wf_4, the working fluid is superheated by 5°C and it exits the vaporizer as superheated vapour at a temperature of 93.01°C. The process of heat transfer in the preheater and vaporizer is presented in the Figure 5 below.

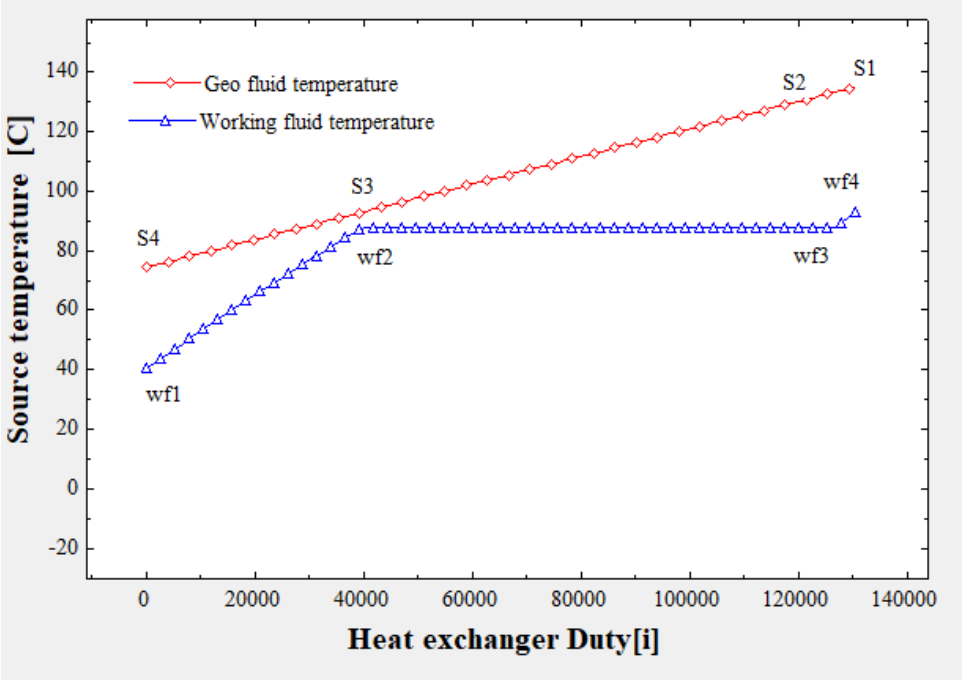

Figure 5: Heat transfer process in the preheater and vaporizer for the basic binary model

A similar process in reverse is observed in the condenser where the working fluid comes from the turbine exit at station wf_6 and enters the condenser as superheated vapour. The fluid is de-superheated between stations wf_6 and wf_7 in the condenser until it reaches condensing temperature of 40°C. The fluid is saturated vapour at point wf_7 and passes through a process of condensation between stations wf_7 and wf_8 until it is saturated liquid at station wf_8 after which the fluid exits the condenser at condenser temperature.

With the given boundary conditions at vaporizer pressure of 12 bars and geothermal fluid mass flow of 510 kg/s, the wet cooled basic binary model produces 10.072 MW of net generator power output at a parasitic load ratio of 18.05 % and the cycle efficiency is 9.46 %. With the given geothermal fluid mass flow, the models require about 11 production wells.

5. CONCLUSION

The model has used available data from the prefeasibility study conducted. Choice of the organic working fluid was informed by the work done by Mwagomba (2015) where various working fluids were subjected to tests with respect to resource temperature and vaporizer pressure. This paper has indicated that to produce 10MW of electricity using binary power plant technology would require more geothermal fluid i.e. 510 kg/s, meaning more geothermal wells to be sunk. The demand of more geothermal fluid requires optimizing the model in terms of working fluid, cycle pressures as well as geothermal fluid parameters, reinjection temperature included. As Malawi will be undertaking full feasibility study for Chiweta prospect, aspect of optimizing the model will need to be given much focus in order to ascertain an economically viable model where less fluid is used to produce power. In such regard, extraction of the fluid will improve efficiency and sustainability of the geothermal system.

6. REFERENCES

Chorowicz, J., 2005. The East African rift system. Journal of African Earth Science, pp. 379-410.

DoE, 2003. National Energy Policy of Malawi - Department of Energy Affairs. Zomba, Malawi: Government Printers, Malawi Government.

DoE 2018. Assessment of Geothermal resource In Malawi: A Reconnaissance and Prefeasibility Report.

Dulanya, Z., Morales-Simfors, N. & Sivertun, A., 2010. A Comparison Between Silica and Cation Geothermometry of the Malawi Hot springs. Bali, Indonesia, s.n.

Eliyasi, C., 2015. MSc. Thesis report: Geothermal Potential Mapping of Northern Malawi Using Remote Sensing and Geological Data Integration, Enschede, Netherlands: University of Twente.

GDC - Kenya, 2010. Assessment of the Geothermal Potential of Malawi (Unpublished), Lilongwe, Malawi: Geothermal Development Company - Kenya report prepared for Geothermal Projects Limited.

Hardarson, B., 2014. Structural Geology of the Western Branch of the East African Rift: Tectonics, Volcanology and Geothermal Activity Naivasha, Kenya, UNU-GTP.

Kraml, M., Mnjokava, T., Mayalla, J. & Kabaka, K., 2010. Surface Exploration of a Viable Geothermal Resource in Mbeya Area, SW Tanzania. Part II: Geochemistry. Bali, Indonesia, IGA.

Mannvit - Geoelec, 2012. Working paper: A Software to evaluate financial viability of geothermal projects., Reykjavik, Iceland: s.n.

Mwagomba, T., 2015. Preliminary Technical and Economic Feasibility Study of Binary Power Plant for Chiweta Geothermal Field, Malawi. In: Geothermal Training in Iceland: 2016. Reykjavik, Iceland.: UNU-GTP.

NSO, 2018. Population Projection Malawi, Zomba, Malawi: National Statistical Office.

World Bank, 2019 Malawi Electricity Access Project [Online] Available at: http://projects.worldbank.org/P164331 [Accessed July 2019].