Proceedings World Geothermal Congress 2020+1
Reykjavik, Iceland, April - October 2021

The Design Ambient Temperature for Geothermal Organic Rankine Cycle Power Plant

Agahi, Reza, Atlas Copco Gas and Process

Atlas Copco Mafi-Trench Company LLC, Address: 119 Mosaic Irvine, CA 92603 USA

reza.agahi@atlascopco.com

ABSTRACT

It is a common practice to specify the design ambient temperature for a geothermal Organic Rankine Cycle power plant with air cooled condensers. The specified value is normally the historical average ambient temperature for the region where the plant is located. Power production of an Organic Rankine Cycle plant is greatly influenced by the extreme summer and winter ambient temperatures.

In this paper the author evaluates a geothermal power plant performance by simulation and utilizing historical statistical measures for ambient temperature. Average, mode and median ambient temperature values are chosen in turn as the design temperature. The annual cumulative electrical power productions of the plant are compared to determine the most optimal statistical measure for the ambient temperature. This study is based on an actual resource data from an operating geothermal Organic Rankin Cycle power plant in Turkey.

This simulation study considers three statistical measures of Average, Mode and Median for ambient temperature. The Mode shows more promising outcomes than the other two measures.

Keywords: Organic Rankine Cycle, Medium enthalpy geothermal resource, Air cooled condenser, Ambient design temperature, Inflow radial turbine, Variable geometry turbine, Variable inlet guide vanes.

INTRODUCTION

Energy recovery from geothermal resources with medium to low temperature[(1)] is in demand and the number of projects are on an upward trend. The countries with a well-established feed in tariff (FIT) and associated regulations have enjoyed significant investments in renewable energy in the form of geothermal binary cycle power plants[(2)].

A geothermal binary cycle power plant utilizes a low boiling organic fluid (binary fluid) to exchange heat with the geothermal resource. A slightly super-heated organic vapor drives an expander which in turn drives a generator. The organic fluid rejects the remaining heat in a condenser before being pumped back into the evaporator. Figures 1 and 2 depict two typical geothermal binary cycle power plants PFD's; Figure 1 shows a Geothermal Organic Rankine Cycle (ORC) power plant with air cooled condenser (ACC) and Figure 2 is a Geothermal ORC power plant with water cooled condenser (WCC).

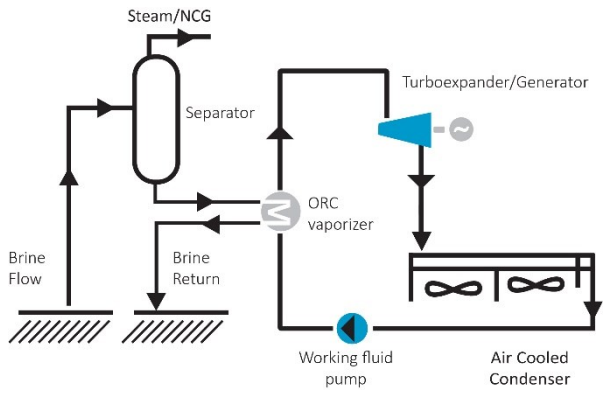

Figure 1 (left): Process Flow Diagram for a Geothermal ORC Power Plant with ACC and WCC

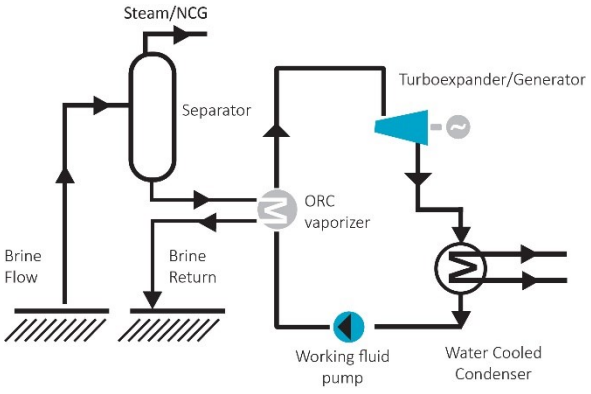

Figure 2 (right): General configuration of a water-cooled condenser and an air-cooled condenser inside the process

One of the most important and critical design parameters for a geothermal ORC power plant with ACC is the ambient temperature (i.e., what temperature value should be used to configure the ORC design and to prepare design specification for the ACC).

Historical average ambient temperature for the region where the plant will be located has been considered as standard input. The historical average ambient temperature for a nearby region where the data is available is the next best value. Performance of a geothermal ORC power plant with ACC increases with cooler ambient conditions and decreases with warmer ambient temperature.

Many geothermal ORC power plants have been established in Aydin Valley, Turkey, since mid-2000. The earlier plants were all designed based on an average ambient temperature of 18° C. Several plants suffered from poor performance and low power production during summer of 2013 and 2014 when the ambient temperature was abnormally high and reached a maximum of 40° C[3].

That experience caused uncertainties about the assumed design value for the ambient temperature. Geothermal energy companies took a moderately more conservative approach and arbitrarily specified 19 – 20° C, while a few companies went to the extreme and called for 21 – 22° C for the design ambient temperature.

In this paper, the author will review and discuss the actual annual cumulative power production of an operating ORC power plant that is designed based on the historical average ambient temperature. Then the annual cumulative power production of the same plant should have been designed with either historical mode or median of ambient temperature are simulated. Comparison of power productions could introduce some degrees of statistical confidence as to which measure, if any, provides an optimum annual cumulative power production.

AMBIENT TEMPERATURE STATISTICS

A review of several websites that provide ambient weather data did not produce the required statistics to evaluate the statistical measures of average, median and mode. Most websites have detailed historical data for average, maximum and minimum but no information exists for median or mode. Appendix I represent a typical data of average ambient temperature for Aydin Valley, Turkey.

Fortunately, one geothermal energy company in Aydin Valley had data available for hourly ambient temperature measurements for the time period of March through December 2016[4]. Appendix II shows a sample of the recorded data.

This data was utilized to calculate statistical measures for average, median and mode as shown in Table 1 below.

	Average	Median	Mode
January	4	3.5	2.5
February	7	6.5	5.5
March	13.08	12.95	11.58
April	19.05	18.29	17.00
May	20.24	20.16	19.94
June	26.88	26.71	24.61
July	29.30	28.85	27.09
August	28.44	27.68	26.68
September	24.14	23.34	20.83
October	19.29	18.35	17.46
November	13.81	13.23	11.83
December	6.51	6.18	4.75
Annual	17.64	17.14	15.81

Table 1. Monthly and Annual Statistical Measures of Average, Median and Mode, 2016

The statistical measures for ambient temperatures of January and February were obtained by extrapolation from the measured data for the other ten months.

ORC POWER PLANT PERFORMANCE SIMULATION

The geothermal ORC power plant for this study is with the resource data depicted in Table 2.

Brine Conditions	Units	Design Values
Temperature	°C	170
Pressure	BarA	10
NCG's	%	2
Flow	m^3/hr	7,700
Reinjection Temperature	°C	>70

Table 2. Geothermal Brine Conditions for Study Case

The ambient design temperature for this plant was specified as 18 ° C. The expected power production was 15 MW net at the design point.

The design simulated gross electrical power values for this plant utilizing the above calculated statistical values of average, median and mode for the design ambient temperature are shown in Table 3 below. The simulation was constrained by net electrical power production of 15 MW.

Design Ambient Temperature	Gross Electrical Power Production	Net Electrical Power production	Brine Flow
Average, ,17.64 ° C	17,662 kw	15,000 kw	239.2 kg/s
Median, 17.14 ° C	17,643 kw	15,000 kw	236.3 kg/s
Mode, 15.81 ° C	17,588 kw	15,000 kw	231.3 kg/s

Table 3. Geothermal ORC Power Plant Simulated Performance at the Design Point

The actual monthly electrical power production for this geothermal ORC power plant is depicted in Table 4 below.

	January	February	March	April	May	June
Average Ambient Temp (°C)	**4**	**7**	**13.08**	**19.05**	**20.24**	**26.88**
Generator Eff (%)	97.0	97.0	97.0	97.0	97.0	97.0
Gear Box losses (kW)	370.1	370.1	370.1	370.1	370.1	370.1
Est. Exp. Eff (%)	83.0	83.5	86.0	85.0	85.0	83.0
Gen.Gross Output (kW)	20435.2	19702.5	18236.9	16827.8	16550.9	15031.8
Internal Cons. (kW)	2599.5	2598.7	2592.9	2582.0	2579.1	2558.9
Net Output (kW)	**17835.7**	**17103.8**	**15643.9**	**14245.8**	**13971.8**	**12472.9**
Gear Box losses (kW)	371.2	371.2	371.2	371.2	371.2	371.2
Est. Exp. Eff (%)	83.0	83.5	86.0	85.0	85.0	83.0
Gen.Gross Output (kW)	19776.9	19184.3	18299.3	16684.4	16409.7	14543.5
Internal Cons. (kW)	2660.1	2658.6	2650.4	2640.0	2637.0	2617.8
Net Output (kW)	**17116.7**	**16525.7**	**15648.9**	**14044.4**	**13772.7**	**11925.8**
Gear Box losses (kW)	371.6	371.6	371.6	371.6	371.6	371.6
Est. Exp. Eff (%)	83.0	83.5	86.0	85.0	85.0	83.0
Gen.Gross Output (kW)	19934.2	19337.0	18444.8	16817.2	16540.4	14659.5
Internal Cons. (kW)	2681.8	2680.2	2671.8	2661.4	2658.4	2639.0
Net Output (kW)	**17252.5**	**16656.8**	**15773.0**	**14155.8**	**13882.0**	**12020.5**
	July	**August**	**September**	**October**	**November**	**December**
Average Ambient Temp (°C)	**29.3**	**28.44**	**24.14**	**19.29**	**13.81**	**6.51**
Generator Eff (%)	97.0	97.0	97.0	97.0	97.0	97.0
Gear Box losses (kW)	370.1	370.1	370.1	370.1	370.1	370.1
est. Exp. Eff (%)	82.5	83.0	84.0	85.0	86.0	83.0
Gen.Gross Output (kW)	14489.6	14681.5	15653.1	16771.9	18062.8	19821.7
Internal Cons. (kW)	2549.5	2552.9	2568.2	2581.5	2591.8	2598.7
Net Output (kW)	**11940.1**	**12128.6**	**13085.0**	**14190.4**	**15471.0**	**17223.0**
Gear Box losses (kW)	371.2	371.2	371.2	371.2	371.2	371.2
Est. Exp. Eff (%)	82.5	83.0	84.0	85.0	86.0	83.0
Gen.Gross Output (kW)	13931.8	14204.3	15332.3	16628.9	18124.6	19182.7
Internal Cons. (kW)	2608.5	2611.6	2626.6	2639.5	2649.2	2659.2
Net Output (kW)	**11323.3**	**11592.7**	**12705.7**	**13989.5**	**15475.4**	**16523.5**
Gear Box losses (kW)	371.6	371.6	371.6	371.6	371.6	371.6
Est. Exp. Eff (%)	82.5	83.0	84.0	85.0	86.0	83.0
Gen.Gross Output (kW)	14042.9	14317.6	15454.5	16761.3	18268.8	19335.3
Internal Cons. (kW)	2629.6	2632.8	2647.9	2660.8	2670.8	2680.9
Net Output (kW)	**11413.3**	**11684.8**	**12806.6**	**14100.5**	**15598.0**	**16654.4**

Table 4. Monthly Electrical Power Production

The simulated annual cumulative power production for this geothermal ORC power plant shows that the plant has utilized the above calculated statistical measures for the ambient design temperature; this is shown in Table 5.

The last column in Table 5 shows a comparison of the required heat exchanger surface areas. In this comparison, the required surface area for the mode is assumed as a reference at 100%.

Design Ambient Temperature	Annual Cumulative Gross Electrical Power Production	Annual Cumulative Net Electrical Power production	Brine Flow	Heat Exch. Area Compared to the Ambient Mode's Design
Average, 17.64 ° C	141.04 Gwh	118.97 Gwh	239.2 kg/s	102.3%
Median, 17.14 ° C	139.93 Gwh	118.03 Gwh	236.3 kg/s	101.7%
Mode, 15.81 ° C	142.67 Gwh	121.26 Gwh	231.3 kg/s	100.00%

Table 5. Annual Cumulative Gross and net Electrical Power Production

CONCLUSIONS

This study and associated simulation is based on limited data and historical measures. It shows that an optimal design ambient temperature for this geothermal ORC power plant is the statistical mode of the ambient temperature data. It should be noted that the outcome is for the assumed location and the applicable geothermal resource.

The CAPEX will be lower for the statistical mode of the ambient temperature than the design temperature. This is due to the smaller heat exchanger area required.

It should also be noted that the simulation is based on a power plant that is configured with inflow radial turbine featuring variable inlet guide vanes. This turbine technology is known as the variable geometry turbine and has shown to produce more cumulative power compared to the other turbine technologies available in the geothermal ORC market[5].

More studies and simulations on this subject matter are recommended.

APPENDIX I

THE AVERAGE STATISTICAL METEOROLOGICAL DATA (1950 – 2015)												
AYDIN	**January**	**February**	**March**	**April**	**May**	**Jun**	**July**	**August**	**Sept.**	**Oct.**	**Nov.**	**Dec.**
1.	8.2	9.3	11.8	15.8	20.9	25.9	28.4	27.6	23.5	18.4	13.3	9.6
2.	13.2	14.7	17.9	22.5	28.1	33.3	36.1	35.7	32	26.2	19.7	14.6
3.	4.3	4.9	6.7	10	14.2	18.1	20.5	20.2	16.7	12.7	8.7	5.8
4.	3.5	4.2	5.3	6.1	7.5	9.2	10	9.2	8.6	6.2	4.2	3.4
5.	12.2	10.4	9.7	8.7	6.3	2.3	0.8	0.5	2.1	5.7	8.3	12.8
6.	108.6	93.8	70.4	52.9	36.5	13.5	3.9	2.3	13.1	44.2	83.9	120.9

AYDIN

1. AVERAGE TEMPERATURE (°C)
2. AVERAGE HIGHEST TEMPERATURE (°C)
3. AVERAGE LOWEST TEMPERATURE (°C)
4. AVERAGE INCOMING SOLAR FLUX (Hours/day)
5. AVERAGE RAINY DAYS
6. AVERAGE TOTAL RAIN FALL (kg/m^2)

THE HIGHEST AND LOWEST AMBIENT TEMPERATURES MAESUARED FOR LONG TERM (1950 – 2015)												
THE HIGHEST TEMPERATURE (°C)	23.2	25.2	32.4	35.4	40.2	44.4	46.4	43.8	43.3	37.8	30.7	25.9
DATES MEASURED	1/18/1971	2/18/1950	3/27/1987	4/30/2013	5/31/1969	6/27/2007	7/27/1987	8/12/2002	9/1/2007	10/2/1991	11/2/2004	12/17/1957
LOWEST TEMPERATURE (°C)	-7.6	-5.4	-5	-0.8	4.6	8.4	13.4	11.8	7.6	2	-2	-5.3
DATES MEASURED	1/18/1964	2/6/1950	3/6/1987	4/10/1997	5/5/1990	6/3/1990	7/3/1971	8/31/1965	9/30/1970	10/30/1987	11/27/2004	12/19/1953

HIGHEST RAIN FALL (kg/m^2)	93.8			
	1/4/2009			
HIGHEST WIND SPEED (km/h)				106.2
				4/19/1969

APPENDIX II

Hourly Ambient Temperature, January to December 2016

DAYS		1	2	3	4	5	6	7	8	9	10	11	12	13	14	15
00:00 / 08:00	1:00	9.8	3.4	7.5	11.5	11.1	7.8	7	6.6	3.4	3.7	4	5	7	7	0
	2:00	9.5	2.4	7.8	11.1	11	7.6	6.3	4.8	4.2	5	5	5	7	5	0
	3:00	8	2.5	7.6	10.9	10.7	8	6.8	5	2.7	3.2	5	5	8	5	0
	4:00	5.8	1	7.3	10.5	10.9	7.1	6.9	4.9	2.5	2.2	6	5	8	5	0
	5:00	5.5	1.2	7.1	10	10.5	6.7	5.4	5.4	2.6	2.4	5	3	7	3	0
	6:00	4.8	1.4	7.1	10.1	9.7	6.6	5.3	5.1	2.7	2	5	3	7	2	0
	7:00	5	0	7.4	9.9	10.1	5.5	5	5.2	2.1	1.1	4	4	8	2	0
	8:00	3.9	0	8.2	9.3	9.8	4.8	4.7	6.1	2.6	1.5	2.5	6	8	1.7	0
08:00/ 16:00	9:00	4.5	4	7.8	9	9	4.7	5	7	2.4	3.7	5.2	4.2	8	2.6	1
	10:00	7.33	4.4	8	10	11	7.3	5	8	3.5	4.3	7.5	5.5	8.4	5	2.5
	11:00	9	6.5	10	12	13	9.1	8	10	5.9	8.4	8	6	10.3	7.2	2.7
	12:00	10.7	8.2	13	12	13	11.1	9	12	8.2	9.2	10.5	7.6	13.3	7.1	3.9
	13:00	10.9	8.9	14	14	15	12.3	11	12	9.7	11.1	12.2	8.2	14	8.2	5.8
	14:00	10.8	9	16	15	16	13.5	14	13	10.7	12.6	14.2	8.6	14.4	8.4	7.4
	15:00	10.6	9.5	17	15	18	14	14	13	11.8	13.4	16	10.1	14.5	8.6	9.6
	16:00	11.2	10.1	16	15	18	14	14	14	12.4	14.5	16.2	11	12.3	10	9.1
16:00 / 24:00	17:00	9.7	10	15.9	14.7	16	14	13.9	12.7	12.1	14.1	16	11.7	11.6	9.2	8.2
	18:00	10.2	8.9	14.8	14.1	14	13	12.2	11.3	8.1	12.1	13.5	10.7	10.9	8.2	5
	19:00	8.6	7.7	14	13.3	12.6	10	11	7.9	7.5	10.4	10.9	9.8	10.7	7	3.8
	20:00	6.5	7.6	13	12.2	11	9	9.5	6.7	6.7	8	9.3	9.1	10.3	5.7	4
	21:00	7.8	8.2	13	12	10	8	10	6.2	5.5	7.1	8.6	9.4	10	5.6	2.8
	22:00	5	6.9	13.2	12.2	9.2	7	8.7	4.9	5.9	6.4	8	8.5	9.1	5.2	2.7
	23:00	4.4	7.2	12.6	11.8	8.6	7	7.1	5.2	4.7	4.9	7.3	8.5	8.5	4.5	3.5
	00:00	3.7	8.3	13	11.2	7.9	7	5.7	4.5	6.1	4.6	7.5	7.8	7	3.9	3.8

DAYS		16	17	18	19	20	21	22	23	24	25	26	27	28	29	30	31
00:00 / 08:00	1:00	3	3.1	2.5	0	0	0	7.6	6	3	3.3	4.8	3	2	2.3	3	-0.5
	2:00	3	3	1	0	0	1.1	7.2	5.7	4	3.6	4.8	1.97	2.2	2.6	2.8	-1
	3:00	3	2.9	0	0	0	-0.1	7.6	5.6	3	2.8	4.9	1.9	1.5	2.6	2.6	-1.5
	4:00	3	1.7	0.2	0	0	1.6	7.5	4.9	3	2.6	4.8	1.5	1.7	2.9	2	-1.7
	5:00	3	2.5	0	0	0	-1	7	5.5	4	1.7	5	0.5	1.5	2.4	1.6	-2
	6:00	2	0.6	0	0	0	0.1	7.5	4.4	4	2.7	1.9	0	0.8	2.3	0.7	-1.5
	7:00	2	1.3	0	0	0	-0.5	7.3	3.1	3	1.3	1.6	0.5	0.5	1.6	0.2	-1.8
	8:00	0	2.7	0	0	0	-0.5	7.5	4.6	3	2.8	1	-1	0.7	2	-0.4	-1.6
08:00/ 16:00	9:00	3.4	1.7	0.5	0	0	0.3	7.7	3.2	3.4	3	3.4	5	1.85	1.85	0.46	-1.1
	10:00	4.9	4.3	3	2	0	5.2	9	3.3	6.99	4.1	5.4	6.55	1.62	1.62	2.49	1.91
	11:00	7.9	6.9	6	3.5	0.4	7.5	9.2	5.2	8.1	6.8	6.1	8.5	2.4	2.4	5.6	1.74
	12:00	10.2	8.2	6.5	4.2	4.9	9.3	8.9	8.4	11	8.3	6.5	9.5	3.9	3.9	6.83	5.8
	13:00	11.1	8.9	7.8	7.3	8.3	10.8	8.4	9.8	12	9.1	7.2	10.7	3.6	3.6	8.51	4.6
	14:00	11.2	9	7.4	7.1	9.4	10.1	7.5	10.26	12.3	10.5	9.99	11.7	3.9	5.15	9.2	5.3
	15:00	11.8	9.5	9.2	7.8	10.1	9.9	7.8	10.8	11.8	11.2	11	12.4	5	5	9.5	5.7
	16:00	11.3	9.3	8.2	7.8	10	9.6	7.6	11.1	11.9	11.4	11.7	12.3	4.46	6	8.85	5.9
16:00 / 24:00	17:00	10.9	8	8	10	10	9	7.5	10.3	11.4	10.8	9.8	10.8	4	5.7	7.4	6
	18:00	10.5	8	8	7	7	9	7	8.5	12.7	9.5	9.1	10.5	4.5	5.8	5.9	4.8
	19:00	8.3	7.8	7.8	4	6	8	7	9.8	11.7	7.7	7.8	9.6	3.9	4.9	5.4	3.4
	20:00	5.4	6.6	6.3	3	3	7	6	6	10.3	6.4	7	5.6	3.6	5.1	5	2.2
	21:00	5.6	5.9	3.5	3	3	7	6	6	9.3	6	8.5	4.7	3.5	5.6	4.3	1.7
	22:00	5.8	5.6	2	1	2	7	6	6	9.1	4.7	6.5	1	3.1	4.4	4	1.7
	23:00	5.1	2.3	2.6	2	1	7	6	6	8.5	5.5	5.3	2.3	3.1	3.6	1.5	1.2
	00:00	4.5	2.6	2.5	2	3	7	7	7	8.6	6.1	4.2	1	3.1	2.8	0	1.5

REFERENCES

1. Tevfik Kaya, An Overview on Drilling and Geothermal Energy Projects in Turkey, *GRC Annual Meeting, GRC International Session*, Reno, Nevada, USA, (September 20 – 23, 2013)
2. Buscher, Eckerhard; Feed-in-Tariffs Blessing or Curse for Geothermal Energy? Worldwide Background and Overview, *GRC Transactions*, Vol 36, Reno, Nevada, USA (September 30 – October 3, 2012)
3. Weather Underground Website, *https://www.wunderground.com*
4. Private correspondence
5. R. Agahi and C. Spadacini. Comparison between Variable and Fixed Geometry in Geothermal Power Plants, *Proceeding World Geothermal Congress 2010*, Bali, Indonesia (25-29 April 2010)