Methods of BHE flushing, charging and purging in Sweden

Monika Ignatowicz, José Acuña, Willem Mazzotti, Åke Melinder, Björn Palm

KTH Royal Institute of Technology, Brinellvägen 68, 100 44 Stockholm, Sweden

monika.ignatowicz@energy.kth.se

Keywords: charging, flushing, purging, secondary fluid, borehole heat exchanger

ABSTRACT

In Sweden, there are more than 500 000 small and about 500 relatively large ground source heat pumps (GSHP) having a total installed capacity of about 5.6 GW delivering approximately 15 TWh · yr^{-1} of heating and cooling energy in Sweden. The operational lifetime and reliability of any GSHP depends heavily on the way the system is designed, installed and operated. In order to provide a good system performance after installation, aspects such as borehole heat exchanger (BHE) system flushing, charging and purging, among others, should be taken into consideration. The aim of this work has been to review some existing methods of system flushing, charging and purging in order and make observations that may be applicable for the GSHP industry. Two Swedish case studies have been followed up and compared to existing strategies suggested by IGSHPA.

The results show that there is a lack of specific recommendations regarding the flushing and purging procedures for BHEs in Sweden. A well-defined range or adaptation of similar IGSHPA standards could help in defining the minimum flush velocity. The two case studies showed different practices, with flushing velocities being significantly higher than the minimum flushing velocity recommended by IGSHPA. Flushing flow rates based on this standard are presented in this work for some typical BHE pipe sizes used in Europe.

1. INTRODUCTION

Sweden is the European leader in shallow geothermal energy utilization, in terms of the installed capacity, as well as extracted thermal energy due to extensive use of GSHPs for both heating and cooling purposes. There are about 500 000 small and 500 large ground source heat pumps delivering approximately 15 TWh of heating and cooling energy per year in Sweden, and the total installed capacity is estimated to be about 5.6 GW, Acuña et al. (2015). According to the statistics there are around two million single-family houses in Sweden and around 20 - 25 % of these houses are heated by GSHP. Most of these being small, ranging from 5 to 10 kW heating capacity.

Most of GSHP systems in Sweden use vertical boreholes as ground heat exchangers, which couple heat pumps to the ground. A secondary fluid inside a closed loop is used to carry the heat between the ground heat exchanger and the heat pump. The Geological Survey of Sweden (SGU) and the Swedish Environmental Protection Agency recommend ethyl alcohol based secondary fluids for the ground source heat pumps due to relatively good thermophysical properties and low toxicity (SGU, 2008). The ethyl alcohol based secondary fluids are usually not exceeding 30 wt-%, corresponding to a freezing point of -20.5 ºC, due to flammability risks (Ignatowicz et al., 2015).

The typical Swedish setup consists of one or several borehole heat exchangers (BHE) vertically drilled in the ground to a certain depth, often between 150 and 300 m. Swedish design conditions differ from systems found in many other countries due to climatic and geological conditions, as well as the building codes and other regulations and factors. In many countries the space around the U-pipe in the borehole is filled with grout to prevent water and contaminants migration along the vertical borehole (Gustafsson et al., 2010). Swedish guidelines allow for non-grouted, groundwater filled BHEs in most places.

The most commonly used collectors are closed-loop single polyethylene U-pipes, although double U-pipes are also used for commercial GSHP systems. Pipe size is typically 40x2.4mm for single U-pipe and 32x2.0 mm for double U-pipes (Gehlin et al., 2015).

The operational lifetime and reliability of any GSHP depends heavily on the way the system is designed, installed and operated. Three aspects should be taken into consideration: borehole heat exchanger system flushing, charging and purging in order to provide a good system performance after installation.

There are no specific standards or guidelines regarding the minimum flushing velocity in SGU (2008) nor in *Handbook on Indirect Refrigeration and Heat Pump Systems* by Melinder (2015), compared to one established by the International Ground Source Heat Pump Association (IGSHPA).

2. METHODOLOGY

The aim of this paper is to take a first step to investigate the existing flushing, charging and purging methods used in Sweden. A number of interviews together with site visits were made. Two Swedish case studies were followed up and compared to the strategies recommended by IGSHPA. A discussion on the flushing flow rates is presented for typical BHE pipe sizes used in Europe.

3. FLUSHING, CHARGING AND PURGING

The drilling procedures together with pipe assembly and connection work can cause construction residues, dirt and other contaminants to enter the system. Generally, it is advised as a precautionary procedure to seal the pipe ends immediately after installation to minimize the possible contamination level. Sand, dust or plastic pipe shavings, joint sealing materials etc. can very easily find their way into the interior of BHEs and must then be removed. Thus, it is crucial to sufficiently flush and purge GSHP systems to avoid any damages to equipment and to guarantee proper operation.

The flushing, purging and charging procedures can vary from contractor to contractor and sometimes guidelines and / or rules may exist, either written in specification document for given project, or in standard documents such as IGSHPA (2011).

3.1 IGSHPA Guidelines

IGSHPA suggests using so called “flush carts” as shown in Figure 1. The flush cart integrates the purge pump with the valves, hose connections, electric connections, filtration and reservoir tank on a handcart for better portability and ease of use.

The flush cart has valves to allow reversing the secondary fluid flow direction during the flushing / purging process. The reversing flow direction method can improve the removal of trapped air and decrease significantly the time required for purging compared to one flow direction method. It is important to underline that such practices are possible only if there are no system components that can prevent reversing flow e.g.: back-flow prevention and some flowmeters. Moreover, a strainer localized at the top of the flush cart will collect all contaminants during the flushing procedure.

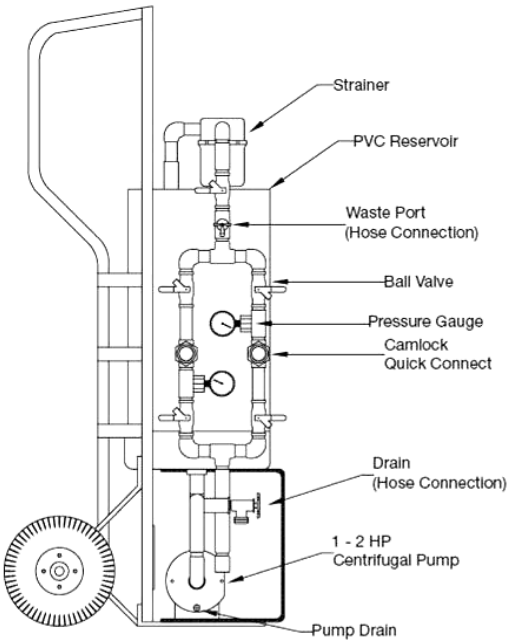

Figure 1: Flush cart design. (IGSHPA, 2011)

System flushing, purging and pressurizing procedures are performed using tap water. The method is normally divided into three steps, starting with the BHE, followed by the piping system between the BHE and the heat pump, and finally the whole system, as follows:

a) Flushing BHE to remove all contaminants.

b) Purging air from BHE.

c) BHE performance verification by comparing pressure drop/flow.

d) Testing for blockages/ restrictions.

e) Flushing piping between BHE and GSHP unit from any contaminants.

f) Purging air from the piping between BHE and GSHP unit.

g) Combining all components into one continuous flushing operation (by opening all valves).

h) Charging the system with antifreeze concentrate.

i) Pressurizing the secondary fluid side.

The recommended minimum flushing flow velocity is set to be 0.6 m · s^{-1} (2 ft · s^{-1}) throughout the piping system to completely remove the trapped air and small particles (IGSHPA, 2011). This value is based on previous work performed by US Army (1985) for sanitary and industrial wastewater collection. According to these studies the velocity criteria are based on the fact that suspended organic solids do not settle at a velocity above 0.6 m · s^{-1}. Solids can settle at velocities below 0.3 m · s^{-1}. Penn (2015) has recommended performing flushing procedure at 135 % of design flow, but in no case less than 0.6 m· s^{-1}.

The flushing flow rate for any given pipe size to achieve the minimum velocity of 0.6 m · s^{-1} in HDPE pipe can be calculated using the equation [1] suggested by (IGSHPA, 2011) presented below:

$$Q_{GLflush} = n \cdot [K \cdot (D_{p,i})^2] \quad [1]$$

Where:

n – Total number of flow paths (-)

K – Flushing constant, K = 0.4896 (mm· s^{-1})

$D_{p,i}$ – Inner pipe diameter (mm)

$Q_{GLflush}$ – Flushing flow rate for a ground loop (l · s^{-1})

The flushing constant *K*, was obtained using the empirical formulation by Hazen (1911) for the common grain sand size is in the range between 0.5 and 2 mm. The value of 4.896 used in the original equation in IGSHPA (2011) has been adjusted in order to work with SI units.

It is important to underline that the recommended minimum flow velocity may not guarantee the removal of solid contaminants such as coarse sand and gravel. Thus, a control of solid contamination in the closed-loop system is highly recommended. These control procedures include: noise control, visual inspections of pumps by removing the pump head from the volute, identification of overheated pump, and control of excessive pressure and temperature differences across the heat exchanger.

The final procedure after system flushing and purging is to pressurize the secondary fluid side in order to avoid cavitation of the circulation pumps and maintain a positive suction-side pumping pressure.

So called “pressurized flow centers” are often used in order to connect the flush cart with the BHE and the piping towards the heat pump. The aim of pressurized flow centers is to perform partial flushing / purging and reversing the flow directions. These flow centers consist of two 3-way valves and flushing / purging ports placed on each side of a pumping 3-way valve module as shown in Figure 2. It includes a built-in set of pumps, valves and connection points.

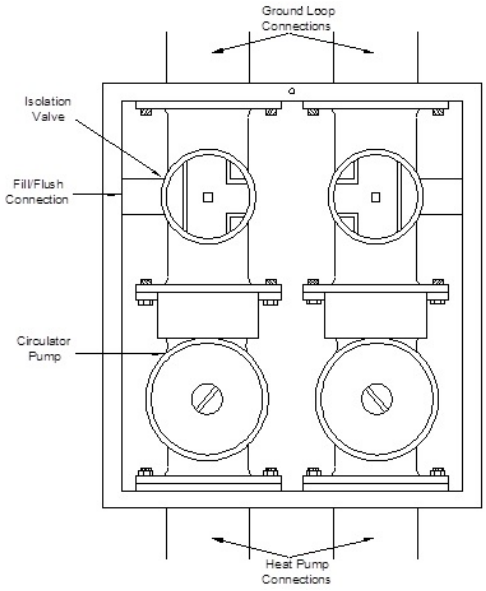

Figure 2: Pressurized flow center (IGSHPA, 2011)

The process in the borehole heat exchanger is performed using tap water and a detailed procedure is as follows:

a) The 3-way valves are set to isolate the BHE from the remaining system.

b) The flush cart reservoir is filled with tap water to a recommended water level during the whole flushing / purging procedure.

c) The BHE is flushed with water. If needed, the reservoir should be refilled when water level drops due to the trapped air. It is important to monitor the flushing water quality. If needed, it is advised to drain the returning water until the clear water is observed at the return line.

d) The discharge water re-entering the reservoir with air bubbles being removed into the reservoir need to be observed. The purging procedure should continue for a minimum of 15 minutes after the last bubble has been observed.

e) While keeping the pump running, the return valve of flush cart can be closed. Changes in water level inside the reservoir (falling at least 2.5 cm) indicates that there is still some trapped air in BHE. In this case, it is recommended to reverse the flow direction or open and close the flush cart discharge valve to induce a “shock” flow. In case of having the flush cart without valves to reverse the flow direction it is possible to switch the hose connections manually to reverse the flow.

f) The flush / purge pump need to be later turned off and the setting for valves need to be changed in order to isolate the BHE and access the connecting piping.

g) After all parts are flushed and purged, all valves are opened in order to connect all the flows into one continuous flow.

h) The estimated amount of antifreeze concentrate can be added.

i) Again BHE needs to be isolated from the remaining system by setting the valves.

j) The return line to the flush cart needs to be disconnected to allow an equal amount of water to be removed while adding the antifreeze concentrate. In most cases, the flush cart reservoir is not large enough and the antifreeze concentrate needs to be added in batches.

k) Finally the flush cart is disconnected and the pressurizing procedures are performed to prevent the cavitation of the circulation pumps and maintain a positive suction-side pumping pressure throughout the annual operation.

Poorly purged and flushed BHEs can result in a higher than expected pressure drops. Therefore, it is very important to test BHEs for any blockages or flow restrictions. The testing procedure for a single BHE is rather easy since the increased pressure drop at high flow rate can directly identify the problem. A larger GSHP installation with multiple BHEs will be more difficult to diagnose.

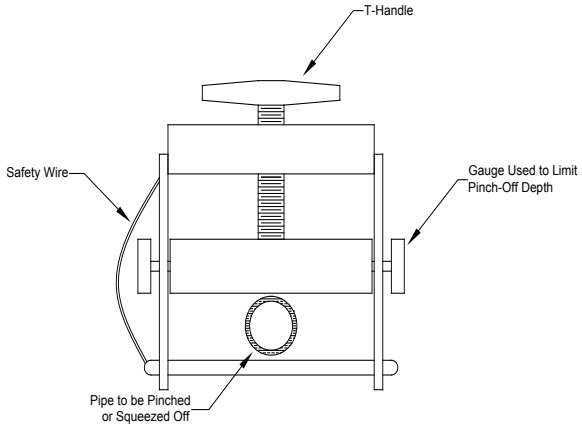

Figure 3: Pinch-off tool. (IGSHPA, 2011)

For detection of a blocked BHE loop, a so called pinch-off tool as shown in Figure 3 is used. The aim of this tool is to squeeze off the BHE while the secondary fluid is circulating. If the blocked BHE is squeezed off with pinch-off tool, no pressure drop change will be detected, indicating that a no-flow condition already exists in the loop.

3.2 Practices in Sweden

Some general recommendations regarding the flushing, charging and purging procedures for indirect refrigeration systems and heat pumps can be found in the Handbook on Indirect Refrigeration and Heat Pump Systems (chapters 8 and 9) by Melinder (2015).

These recommendations state that the system must be thoroughly cleaned with water before charging and purging. Charging procedure should be performed at once or proceed by sections in order to avoid unnecessary exposure of metal components to oxygen. It is recommended that the system is charged slowly (to avoid air pockets) from the lowest point so that the liquid can push out air at high points within the system. It is important to underline that it is highly recommended to install high point air purges (manual or automatic) at high points within the system.

Moreover, the temperature of the secondary fluid during the charging and purging should be at higher temperatures (between +30 and +35°C) since the dissolved oxygen solubility is decreasing with increasing temperature. Additionally, the ready-mixed secondary fluids are recommended. In case of the concentrate it is advised to use distilled or de-ionized water. During the charging procedure it is advised to under-pressurize the system in order to reduce the risk of air pockets formation. The main requirement for the system flushing and purging procedures is to ensure a turbulent flow ($Re > 2300$) to easier remove any dirt contaminants and trapped air bubbles (Melinder, 2015).

It is important to underline that not all of these recommendations can be applicable for BHEs. The charging and purging procedures of BHE are often done fast and the temperature of ethyl alcohol based secondary fluid cannot be higher than +24°C due to the flammability risks. Moreover, the secondary fluid cannot be charged at the lowest point of system due to the differences in the vertical GSHP design. The system is always charged at the highest point, thus the purging procedures are even more important for a proper performance.

There are some simpler models of portable flush carts having the same working principle as those shown in the previous section. The flush carts are available in different sizes (from 60 up to 1000 L) and the simplest model is equipped with only two valves and a pipe connection for easier system flushing and charging. More advanced flush cart models have a plastic reservoir with mounted valves, pump, discharge / fill ports and a filter such as those by TTM BRT (2009), illustrated in Figure 4.

The biggest drawback of using this type of flush cart is its limited capacity and the need of diluting the concentrated antifreeze with water on installation site. The most popular secondary fluid for GSHP application in Sweden is an ethyl alcohol - water solution (70 - 75 % of all GSHPs). Often it is a ready-made solution supplied in 1 m^3 tanks. Otherwise, a

ready-made secondary fluid solution of a given concentration is prepared in advance in larger volumes in order to decrease the total time needed for flushing, charging and purging of installations having many BHEs.

The flush carts including pressurized flow centers are not used in Sweden. Thus, the reverse flow direction method for more effective removal of trapped air is not used. Instead, flow velocities are recommended to be higher by installers. Neither specific recommendations nor regulations regarding the minimum flushing flow rate have been found.



Figure 4: Examples of flush carts. (TTM BRT, 2013)

The proposed flushing flow rates for a single BHE if Sweden (same pipe sizes as most European countries) would apply the American standards are presented in Table 1.

Table 1 Proposed flushing flow rates to obtain 0.6 $m \cdot s^{-1}$ in a single BHE.

Pipe type	$Q_{GLflush}$ ($l \cdot s^{-1}$)	$Q = u \cdot A$ ($l \cdot s^{-1}$)
32x2.0 PN10 PE100	0.38	0.37
40x2.4 PN10 PE100	0.61	0.58
50x3.0 PN10 PE100	0.95	0.91
40x3.7 PN16 PE100	0.52	0.50

The third column in Table 1 presents the flushing flow rates calculated simply by multiplying the recommended velocity (0.6 $m \cdot s^{-1}$) times the cross sectional area of different standard pipe dimensions used in Sweden. Note that the values are almost the same, meaning that a much simpler approach can be used.

Two study visits were made to compare the proposed values in Table 1 with those used out in the field.

Case study 1

The first case study is a newly installed 12x200 m deep U-pipe type collectors (40x2.4 PN10 PE100). Note that the leakage and pressure control were performed by the BHE pipe producer.

It is a common practice in Sweden to flush, charge and purge the U-pipe BHE before installing it into the drilled groundwater-filled borehole. Installing an empty U-pipe would not be possible due to the buoyancy forces.

Firstly, the collector was connected using plastic pipes to a tank containing a ready-mixed secondary fluid solution (29 vol-% ethyl alcohol - water solution). A submerged pump was placed inside the tank in order to pump the fluid through the collector. The return line of the U-pipe was connected using a plastic pipe to another empty tank used to collect the "old" secondary fluid.

After a time of about 15 min the BHE was considered clean and the purging procedure could start. At this stage the return line was monitored and the removal of trapped air bubbles was controlled. It is important to keep in mind that the flushing time period may differ from case to case depending on the borehole depth and pipe dimensions. As described in section 3.1, it is advised by IGSHPA to control the flow pattern for a minimum time of 15 minutes after the last air bubble was observed to confirm that the purging process is completed.

After the last visual check of flow pattern in this study case, the return line of the collector was closed. Then, the charging port on the inlet side of the collector was closed as well. Figure 5 below shows a picture taken during the flushing and purging process of a single U-pipe collector.



Figure 5: Charging / flushing of single collector.

Next, the weight was placed at the bottom of the U-bend and the BHE was slowly placed into the borehole as shown in figure 6.

Finally, the excessive length of the collector was cut and both inlet and outlet were quickly sealed to prevent from any dirt entering the U-pipe collector. During the flushing and purging procedure the secondary fluid velocity was measured for a total of 6

BHEs. The average velocities were varying between 1.3 and 1.34 m · s^{-1}, theoretically guaranteeing a clean system. The obtained result showed that the flushing velocity was higher than those recommended minimum flushing velocities in Table 1.



Figure 6: Setting of single collector in borehole.

A similar velocity was maintained during the remaining flushing and purging procedures of the connecting pipes, pumping and remaining loops. The connecting pipes to the heat pump unit were later purged by opening the manual air purges.

Generally it is recommended to install at least one manual air purge at the highest point of the system in order to easier remove any trapped air. Actually, after all flows are connected into a continuous system, it is a common practise to once again remove any remaining air using manual high point air purges localized at the highest point. Description of different types of air purge recommended for any indirect refrigeration system and can be found in Melinder (2015).

Case study 2

The second case study is an existing installation having 14x300m deep U-pipe type collectors (40x2.4 PN10 PE100). A change of the secondary fluid type from ethyl alcohol –water to ethylene glycol - water was in this case performed after around one year of operation. The new secondary fluid was in this case supplied as a ready-made solution. The procedure started with isolating the single BHE and fixing the connection pipes to two different tanks as shown in Figure 7.



Figure 7: Connection of single collector.

The flushing procedures, as shown in Figure 8, started with connecting the pipe from / to tanks changing the secondary fluid type inside the U-pipe BHE. Again a submersed pump was used to pump new secondary fluid directly into U-pipe. The new fluid was used at the same time as cleaning and flushing fluid. Simultaneously, the old secondary fluid was pumped directly into an empty waste tank.

The collectors were considered clean and flushed with new fluid after a time of 15 - 20 minutes and the purging procedure could start. The return line was at this stage monitored and the removal of trapped air bubbles was controlled. It was recommended to wait a minimum of 15 minutes after the last air bubble was observed to consider the purging process completed. After the last inspection of flow pattern; the valve for collector was closed. The secondary fluid was in the same way changed in remaining BHEs. The secondary fluid velocity was measured during the flushing and purging procedure for a total of 7 BHEs. The average velocities were varying between 1.27 and 1.3 m · s^{-1}.

The connection pipes to the heat pump system were later purged by opening two manual high point air purges localized at the possible highest point.



Figure 8: Charging / flushing of a single BHE.

4. CONCLUSIONS

This study shows that there is a lack of specific recommendations regarding flushing and purging procedures for vertical borehole heat exchangers in Sweden.

Recommended methods for purging and charging applied for the indirect systems in Sweden include: ensuring turbulent flow, high secondary fluid temperatures and charging at the lowest point within the system. These recommendations differ from those applied by contractors for vertical BHEs. Firstly, the BHE is flushed with high flow rates between two different tanks and then purged by circulating during an appropriate time period with the same high flow rate.

Moreover, the temperature of 30 wt-% ethyl alcohol based secondary fluid during charging and purging cannot be higher than +24°C due to the flammability risks. The secondary fluid cannot be charged at the lowest point of system due to the differences in the vertical GSHP design, thus the purging procedures are even more important for a proper system performance.

It is highly recommended to define the minimum flushing flow rate (or flow velocity) in order to standardize the procedures. The methods seem at the moment are rather unclear. A well-defined range or adaption of IGSHPA standards could help in setting the procedures.

The results from both case studies showed that the flushing velocity was significantly higher than expected by around 220 %.

NOMENCLATURE

A	Area (m^2)
BHE	Borehole Heat Exchanger
$D_{p,i}$	Inner pipe diameter (mm)
GSHP	Ground Source Heat Pump
PE	Polyethylene
K	flushing constant ($mm \cdot s^{-1}$)
PN	Pressure Number (bar)
Q_{flush}	Flushing flow rate ($l \cdot s^{-1}$)
$Q_{GLflush}$	Flushing flow rate for a ground loop ($l \cdot s^{-1}$)
n	Total number of flow paths (-)
Re	Reynolds number
u	Velocity ($m \cdot s^{-1}$)

REFERENCES

Acuña J, Jansson J, Jernström T, 2015. The case of Sweden: market, research, methods and IGSHPA Sweden. *Proceeding of IGSHPA Technical Conference and Expo 2015*, Kansas City, October 7 – 8, (2015),

Gehlin, S. E.A., Andersson, O., Bjelm, L., Alm, P.G., Rosberg, J.E.: *Proceedings of World Geothermal Congress 2015*, Melbourne, Australia, (2015), Country Update for Sweden.

Gustafsson, A.M., Westerlund, L., Hellström, G.: *Journal of Applied Thermal Engineering,* 30 (2010), 683–691, CFD-modeling of natural convection in groundwater-filled borehole heat exchanger.

Hazen, A.: Transactions, American Society of Civil Engineers (1911), Discussion of dams on sand foundations, 73, 199–203.

Ignatowicz M., Acũna, J., Melinder, Å., Palm, B.: *Proceedings of World Geothermal Congress 2015*, Melbourne, Australia, (2015) Investigation of Ethanol Based Secondary Fluids with Denaturing Agents and Other Additives Used for Borehole Heat Exchangers.

International Ground Source Heat Pump Association, IGSHPA: Ground Source Heat Pump Residential and Light Commercial - Design and Installation Guide*, Oklahoma State University,* Stillwater, Oklahoma, (2011).

Melinder Å.: Handbook on Indirect Refrigeration and Heat Pump Systems, International Institute of Refrigeration, Paris, France, (2015).

Penn D.: *Proceeding of IGSHPA Technical Conference and Expo 2015*, Kansas City, October 7 – 8, (2015), Designing for Success - What About Purging and Flushing.

SGU, Sveriges Geologiska Undersökning: (2008) Att borra brunn för energi och vatten–en vägledning, Normförfarande vid utförande av vatten-och energibrunnar, NORMBRUNN–07.

TTM RTB, *Blandningskärl produktblad*, 2013, TTM Energiprodukter AB, Kalmar, Sweden

US Army: Departments of Army and Air Force (1985) Sanitary and Industrial Wastewater Collection — Pumping Stations and Force Mains, Army TM 5-814-2, Air Force AFM 88-11, Vol. 2.

Acknowledgements

The Swedish Energy Agency, Effsys Expand program and all industrial partners are greatly acknowledged for financing this project. We wish to express our deep gratitude to Stures Brunnsborrningar AB and Wessman Entreprenad AB for their support and possibility of visiting different installations.