Proceedings World Geothermal Congress 2015
Melbourne, Australia, 19-25 April 2015

Broaching: An Effective Method of Well Intervention for Calcite Scale Removal

Daniel Robert Wilson[1], John Gilliland[2], Andrew Austin[3]

[1,3]Contact Energy, Wairakei Geothermal PowerStation, SH1 Taupo, NZ; [2]Western Energy Services, 3/66 Rakanui Road, Taupo, NZ

daniel.wilson@contactenergy.co.nz; john@westernenergy.co.nz; andrew.austin@contactenergy.co.nz;

Keywords: Geothermal, Broaching; Slickline; Wireline intervention; Calcite scale; Well Workover; Contact Energy; Western Energy Services

ABSTRACT

Calcite scaling is the leading cause of production loss in Geothermal wells. The most common well intervention technique to combat the issue of scaling is a drilling rig workover. The average cost of well workovers has increased considerably in the last 5-10 years, resulting in an economical conflict to workover certain wells. In 2013 Contact Energy (CEL, Operator) and Western Energy Services (WES, Service Company) researched, developed, trialled and implemented a wireline intervention technique and methodology to successfully remove and reduce calcite scale in the Ohaaki and Wairakei geothermal fields in New Zealand. This wireline intervention technique, called broaching, is a process developed in the oil and gas industry which uses mechanical tools to remove mainly silica from small diameter production tubing. This process has been transformed to accommodate the geothermal industry by designing tools to combat large volumes of calcite in larger diameter casings.

Contact and Western Energy have successfully utilised Broaching to workover 14 geothermal wells regaining over 22MW of production for less than 50% of a single traditional well workover. Perhaps the largest benefit of broaching is that the wells targeted would have been uneconomical or unfeasible to work over using a rig. Broaching has allowed wells that have been dormant for years to contribute to electricity generation. Contact and Western Energy are continuously analysing empirical data from previous broaching jobs to improve tool development, operations and broaden the available window where broaching can be an effective method of geothermal well maintenance. Tool technology, well conditions, wireline experience, and calcite conditions are some of the many outlying variables determining broaching success.

1. INTRODUCTION

Historically, geothermal wells have been worked over using a drilling rig or coil tubing. The increasing cost of a well workover and the associated lost production time meant that some wells became uneconomical to workover; resulting in wells being left idling or performing at bare minimum levels. For this reason, Contact has been prompted to look for more economical solutions to maintain production.

Broaching is a wireline intervention technique achieved by using mechanical toolsets of increasing diameter to clear out calcite and recover well productivity. Broaching relies on the mechanical action of the jars – slide hammer effect – rather than a free fall effect of the tool to systematically chisel calcite from the casing wall. The skill of the slick line operator is paramount in achieving success and preventing the tool from becoming stuck in the well bore.

The main objective of this paper is to present the findings acquired from May 2013-present regarding broaching as an effective means of calcite scale removal.

2. HISTORY

The term broaching refers to a machining process that uses a toothed tool to remove material on inside surfaces of a component such as an internal keyway, spline or some other shape. The tool is forced into the hole and its profile is reflected in the corresponding internal profile of the part in question. Sometimes the broaching can be done in one pass, but in most cases it requires multiple passes, such as using a press to broach a keyway.

In the case of a geothermal well, a toothed tool is run into a known blockage on wireline and forced through to create a hole. This process is then repeated with increasing sizes and shapes. This sort of broaching has been used in the oil industry to clear wax and scale from wellbores and also to repair damaged tubing. Slickline broaching is commonly used in completed oil and gas wells as a cost effective alternative to full bore cleanouts using coiled tubing.

The first recorded mechanical method of scale removal in the geothermal industry was in China at the Yangbajing Geothermal Power Plant (Zhijiang, Lui et al). Figure 1 below shows the early tool design. This method of calcite removal was similar to broaching, but relied on more of a simple scraper action performed on a routine basis. The process began once the well declined a certain amount and was then mechanically cleaned using a common sized tool. “Since scale levels in production wells is very heavy, about 2mm per week, the wells must be cleaned daily by lowering a tool in the well to scrape the deposits, while the well is discharging. The main problem with this method is the loss of equipment and chunks of scale blocking the wellbore.” (Heping, Yu)

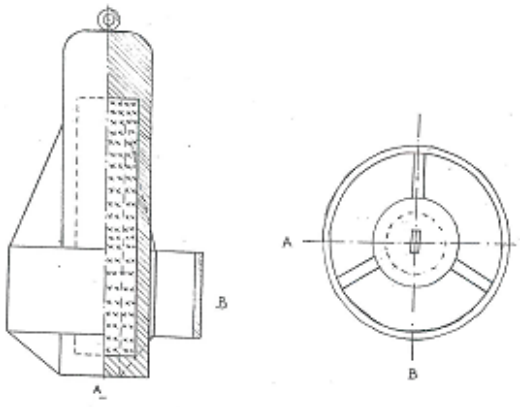

Figure 1: Early broach design from Yangbaijing

Early examples of a Broach were trialled at Lihir power station in Papua New Guiney. This 'Broach' consisted of a 1" pipe with welded pieces of steel used as cutting faces. This tool was used to get through a blockage in a monitor well. The operation was a success and was later named the Ambrose Lulot Rocket. Subsequent repeats of this process were futile. While there was the odd successful 'broaching' of wells at Lihir, it was never deemed a repeatable process.

A similar style of broaching was trialled in the early 2000's at Ohaaki Power Station in Taupo, New Zealand. This style consisted of using a tool attached to wireline, often a piece of heavy drillpipe, and dropped it onto the blockage from a height of about 20-30m. The tool was essentially in free fall. The major problem with this method was that there was no way to get the tool out of the well if it got stuck. Tools such as power jars, accelerators and spang jars were not used. The only way to dislodge the tools was to over pull the wireline or have a weak point at the top of the tool. The tool itself would often be left in hole. This method was also discarded as the risk of loosing the tool string was too great.

3. METHOD AND PROCEDURES

3.1 Equipment and Set-up

A broaching setup consists of many different components used simultaneously and is often referred to as a standard wireline or slickline setup. The main component of the operation is a wireline truck or skid unit composed of a hydraulic winch, drum, slickline, tension/depth/speed device, pressure equipment and downhole tools. Figure 2 shows a typical set up.



Figure 2: Slickline skid unit containing .108" slickline, counter, tension device, hydraulic motor, and control cabin.

Tools are attached to the end of the slickline with a rope socket, head, and swivel. The swivel is designed to allow rotation of the tool string while performing a downhole operation, while limiting the amount of developed torque on the slickline itself. Below the swivel are a number of weight bars ranging in size and weight respective of downhole conditions. Deviation, total depth, depth of expected calcite, strength of slickline, desired impact force, and jar activation are all contributing factors to the amount of weight required for a successful broaching operation. A tool referred to as a "spang jar" is positioned below the allotted weight and delivers impact on the broach itself. The spang jar mimics the motions of a drive down or slide hammer by using mass and gravity to inflict an impact force on the object below it. Other tools such as centralizers, accelerators (force dampeners), spring jars, and tube jars can be used in the tool string depending on well conditions.

3.2 Broaching Tools

Attached to the bottom of the spang jar is the broach. This tool varies in size and shape based on the amount of calcite blockage, desired hole diameter, casing/liner diameter, and deviation. The cutting surface of the broach, or "teeth", are chosen based on hardness of the calcite and hole conditions such as liner slot sizes or casing impairments. Typical teeth shapes are rectangular, diamond as shown in figure 3, rounded, chisels, blades, or files. The overall broach diameters are changed in small increments depending on the progress made through the calcite.



Figure 3: Diamond style broach used for harder calcite or silica.

Empirical data collected on broaching jobs has enabled direct comparisons between different broach geometry. Furthermore, this data has created a means to design, modify, and manufacture new broaching tools used specifically to target problematic calcite and silica depositions in the Geothermal Industry.

3.3 Pre-job Planning

In order for a broaching job to commence, previous well data should be obtained. This data should include casing tallies, downhole surveys, PTS runs for flash point determination, wellhead schematics, known problematic areas such as casing impairments or lost objects in the well, standard flow rates, wellhead pressure, etc. It is critical that the steamfield operators/reservoir engineers share openly with the slickline operators to avoid any errors caused by uncertainty**.**

3.4 Broaching Procedure

The diameter of the first broaching tool is determined based on previous go devils (gauge rings) run in hole. If this information is unknown or determined to be inapt due to recent well changes, the smallest broach size should be run first.

Tools are run in hole at a very slow speed at first to avoid any direct contact with casing or unknown calcite/silica propagation. The top of the calcite is tagged slowly and the depth is recorded and used to determine both the calcite interval size as well as a rate of broach (ROB).

At this stage, removing of the blockage is started by cycling the spang jars in a downward fashion. This will set the cutting blades of the broach into the calcite, effectively shaving off a bit at a time. The length of time cycling and speeds are varied based on the hardness of calcite, weight of tool string, and depth of obstruction. This process is continued until the broach clears the blockage. Once clear of the obstruction zone, the tools are run through the calcite zone repeatedly to clear the obstruction as much as possible for the next broach size. This process is repeated with progressive broach diameters until a desired inner casing diameter is achieved.

Techniques such as flowing the well to silencer or scraper runs are often combined in the process in order to remove debris out of the wellbore. Figure 4 shows depth and tension v time for a typical broaching run. The different runs are associated with changing out tool diameters (2.25”, 2.5”, 2.75”, 4.5”, 5.5”) and clearing the hole to TD.

The empirical data and results will be discussed in detail in Section 4, but can be attributed to a number of different factors. Of these factors, skill and experience of the slickline operator are a pertinent part of the operation. Overlooked minor details during any step of the operation can result in catastrophic mistakes; hindering well performance rather than benefiting.

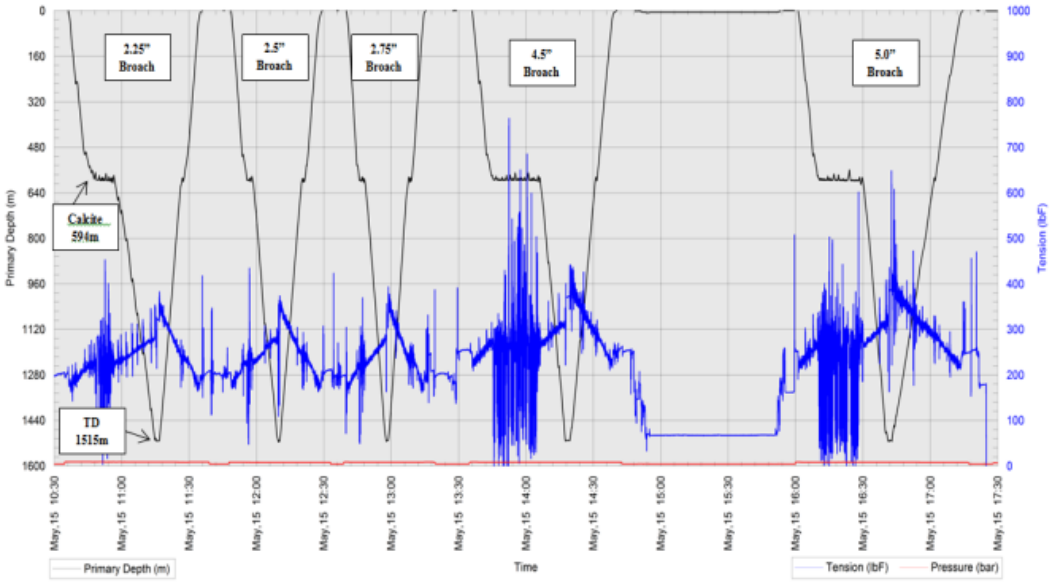

Figure 4: Depth and Tension v Time

4. DEVELOPMENT

Western Energy Services has now broached 14 times for Contact Energy across Ohaaki and Wairakei power stations. Starting May 2013, the broaching has taken place on 10 different wells over a period of 9 months. The result of this intervention has added an additional 57,200 MWh of electricity and a combined MW increase across the stations of 22MW. Figure 5 below shows the accumulated station output resulting from two successful broaching attempts.

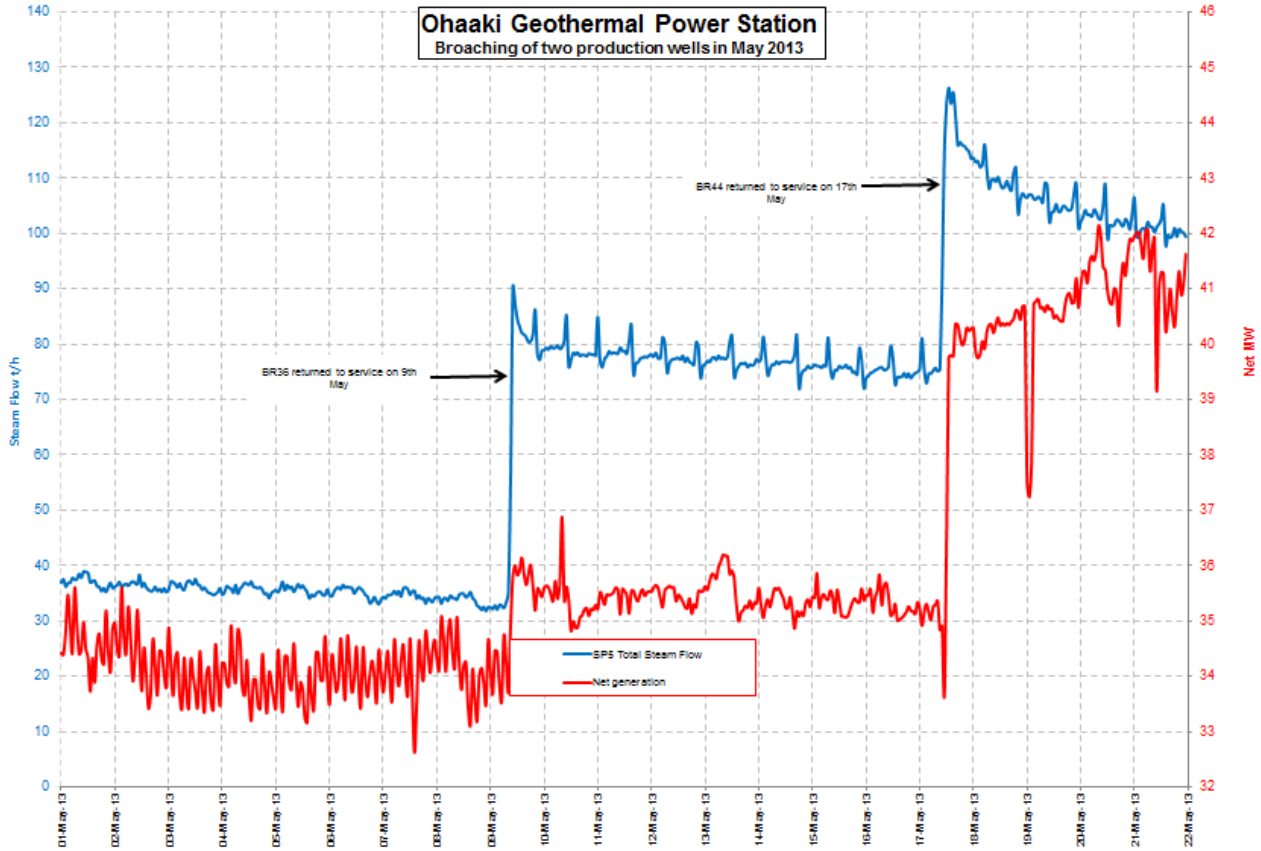

Figure 5: Station output performance before/after broaching

However, as there is no inhibition tubing installed in these wells, the decline caused by calcite continues as soon as the wells are back in production. Part of the development work is looking at broaching frequency and cost vs full well cleanout with a rig and inhibition installation. Currently, wells cleaned out by broaching reach a maximum of 5.5" diameter. Western and Contact are improving processes and procedures to be able to clean a full production ID out to 12.5".

Wellbore chemistry and final broaching diameter affect the run down rate. In order to achieve better production results with broaching requires improving the effective opening diameter of the wellbore.

Contact has defined a broaching tool specification which outlines specific requirements for tool design. These include requirements such as: being able to withstand the characteristics of a geothermal well such as extreme temperature and corrosive fluids, to avoid becoming stuck inside a perforated/slotted liner and to be reliably fished in the event of a pull off using standard wireline fishing tools and techniques. The first broaching tools were taken from the O&G industry and, whilst providing some early success, helped prove the concept. Since this time, the Rate of Broach (ROB) has been improved significantly with a focus on tools suitable to removing calcite in geothermal wells. Contact originally provided Western Energy with sections of used liner with significant calcite scaling to trial designs in the workshop before field deployment. The properties of scale can be imitated with light cement, so once the sections of liner are exhausted, the trials will commence on cemented pipe sections. The trials have proved a number of new tool designs with a focus on hardened teeth and cutting impact angles. Western has also employed Finite Element Analysis on more recent tool designs to help identify areas of high stress in the design and ways to mitigate this. New designs were trialled in the field with relative success. Figure 6 below shows the comparison of the prototype broaches when trailed in three different wells.

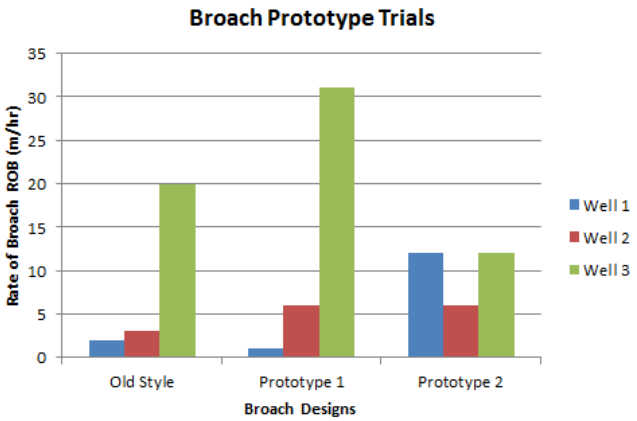

Figure 6: Prototype performance

Depth and degree of inclination also contribute to Broaching success. So far the most success has been on vertical, shallow wells with the calcite scale section generally above 1000m. Only a few deviated wells have been trialled with limited success. Due to the nature of deviation limiting the effective mass brought to impact, this is not surprising. Trials using centralizers, friction limiters, and shorter toolstrings have been field tested with mixed success. Analysis of the ROB across the wells broached to date shows a decreasing ROB with increasing broaching diameter. Figure 7 shows a typical ROB v Broach size chart.

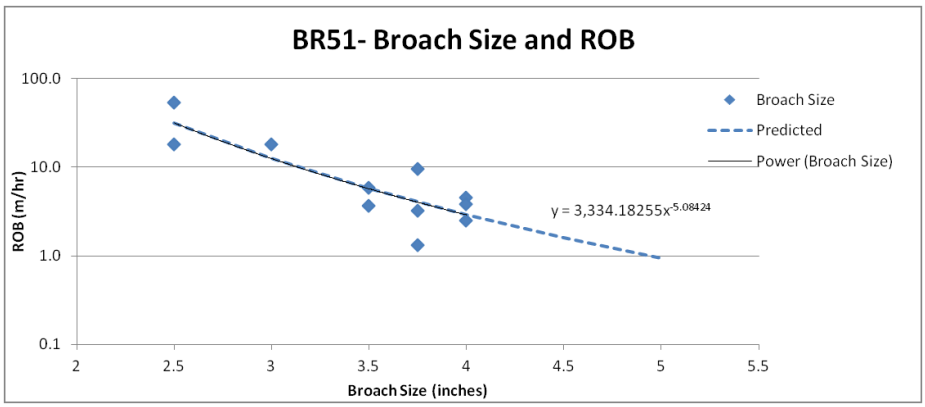

Figure 7: Broaching performance

ROB decline is expected as we increase diameter of the broach by ½" increments. Therefore the surface area to broach increases and the applied force decreases, also the calcite formed closer to the casing wall tends to be older and denser than the newly formed scale. Much like drill bit design; work is being focused on the cutting structure of the broach tool which can maintain an effective ROB throughout the range of broach sizes. Contact and Western are also experimenting with different procedures of broaching out to a pre-determined diameter in stages. The reason for this is to reduce the possibility of collapsing calcite around the tool. This occurrence has produced a stuck tool on more than one occasion; however, the tools have always been dislodged from the obstruction and returned to surface. Occurrences of this issue vary depending on well conditions, but can happen as frequently as 4-5 times a broaching job or not at all during an entire campaign. Problems such as this result in loss time, increased tool and cable wear, reduced broaching progress, and fishing operations in a worse case scenario. Western has parted cable downhole three times in 28 broaching jobs with the root cause of these incidents identified as cable fatigue and operator error. All tools were successfully removed from the wellbores using traditional slickline fishing techniques with no loss or damage of assets.

CONCLUSION

Broaching is a proven, repeatable and cost effective method of calcite scale removal. However, there are a number of factors such as well bore geometry, scale location and desired diameter that can present difficulties in achieving success. A successful broaching campaign requires cooperation with the reservoir and intervention teams alongside the service company to clearly identify the problem and work together for a solution. Broaching is not intended as the answer to calcite removal. Together with conventional drilling rigs, coiled tubing and chemical inhibition systems, broaching provides another tool in the arsenal to maintain and maximise reservoir production.

REFERENCES

Zhijiang, Lui et al; Yangbajing (China) Geothermal Power Plant; Proceedings of The 11th NZ Geothermal Workshop 1989: p312)

Heping, Yu; Chemistry of Geothermal Fluids During Production and Disposal: Calcite Scaling in Yangbajing, Svartsengi and Hveragerdl: Geothermal Training Program; Reykjavic, Iceland; Report 17 1987