Proceedings World Geothermal Congress 2015
Melbourne, Australia, 19-25 April 2015

Experimental Comparison of the Effect of Natural Convection between a Gravel Backfilled and a Cement Grouted Vertical Borehole Heat Exchanger

Wonjun Choi[1] and Ryozo Ooka[2]

Department of Architecture, The University of Tokyo, 4-6-1 Komaba, Meguro-ku, Tokyo, Japan1

Institute of Industrial Science, The University of Tokyo, 4-6-1 Komaba, Meguro-ku, Tokyo, Japan2

wonjun@iis.u-tokyo.ac.jp1; ooka@iis.u-tokyo.ac.jp2

Keywords: ground source heat pump, thermal response test, natural convection, backfill material, parameter estimation

ABSTRACT

The thermal properties of the ground must be considered in the design of borehole heat exchangers (BHEs) with a vertical closed loop. Generally, conduction is assumed to be the only process transferring heat in the ground. However, natural convection induced by density differences can also be an important process transferring heat in a porous medium, as in saturated ground with high porosity and no groundwater flow. In this study, the site-specific thermal properties of the ground were estimated by in situ thermal response tests (TRTs) and the heat transfer by natural convection inside and around the BHE was experimentally analyzed. Two different configurations of BHEs (one backfilled with gravel and another grouted with cement) were installed in a saturated formation composed of sandy soil. The TRT data were interpreted using an infinite line source (ILS) model with the quasi-Newton technique to consider the effect of disturbance from the external environment. Based on the four TRTs at different heat injection rates, we found that natural convection inside and around the BHE can significantly affect its thermal performance.

1. INTRODUCTION

Ground source heat pumps (GSHPs) have become popular because they offer the advantage of using the ground as a stable heat source or sink. One of the key components of such GSHP systems is the borehole heat exchanger (BHE), with the vertical closed loop being the most often used. In the design of the BHE, the thermal conductivity of the ground and the borehole thermal resistance must be known. The former is a site specific value, while the latter depends on the geometry of the BHE and on the thermal properties of the material (e.g., grout, backfill soil) that fills the void annulus space of a borehole. The general method to lower the borehole thermal resistance is the use of thermally enhanced filling material has reported previously (Allan and Kavanaugh, 1999), (Witte et al., 2002), (Borinaga-Treviño et al., 2013).

Recent studies have focused on the performance of groundwater-filled BHEs, the common configuration in northern Europe (Gustafsson and Westerlund, 2010), (Gustafsson and Westerlund, 2011), (Javed et al., 2011). They involved the performance of thermal response tests (TRTs) at various heat injection rates and examined their effect on the estimation of ground thermal conductivity and borehole thermal resistance. Compared with the conventional configuration, natural convection in a BHE can be an important factor affecting its performance. However, the application of groundwater-filled BHEs is limited to certain subsurface conditions. In strong bedrock subsurface areas, where a given borehole is structurally stable and can maintain its shape against lateral pressure without the need for filling material, a groundwater-filled configuration can be applied. However, in weak subsurface conditions, the most common construction method involves grouting or backfilling.

Natural convection inside and around the BHE can be important, even in a backfilled or grouted BHE, if the subsurface has a high porosity and is saturated and the water table is high. The effect of natural convection on the TRTs and on the thermal performance of a BHE for such cases should be further examined. However, to our knowledge, few previous studies have focused on the effects of natural convection in backfilled BHEs; in fact, most studies have dealt with groundwater-filled coaxial BHE or groundwater-filled vertical BHE configurations.

The main objective of this work was to examine the effect of natural convection inside and around a BHE by conducting a TRT. We conducted in situ TRTs with two BHEs with the same geometry but different filling materials inside the annulus: one was grouted with a mix of Portland cement and silica sand and the other was backfilled with gravel. Four TRTs were conducted at different heat injection rates. To consider the effect of disturbance from the external environment and to enhance the estimation accuracy, a numerical parameter estimation technique was applied for the interpretation of TRT data. From our experimental results, the effect of natural convection on the performance of BHEs was verified and compared.

2. EXPERIMENTAL SETUP

2.1 Borehole Heat Exchangers

The experimental system was constructed at the Chiba Experimental Station in the University of Tokyo (Inage Ward, Chiba, Japan) in 2014. The schematics of the drill log and the experimental setup are shown in Figure 1. The study site was stratigraphically divided in a top layer of loam and clay down to 8 m, followed by fine sand down to 25 m, silt between 25 m and 31 m, and fine sand down to 60 m (Figure 1a). The groundwater level was around 12 m depth. The porosity and hydraulic conductivity of the fine sand and the dominant composition of the site are described in Table 1. Hydrogeological parameters such as porosity and hydraulic conductivity were obtained from previous pumping and boring tests conducted at the same site in 2005 (Nam et al., 2008). Two vertical closed loop BHEs were installed at a distance of 1.5 m from each other with an observation well drilled between them (Figure 1b). The effective depth and diameter of the boreholes was 50 m and 165 mm, respectively. After the drilling, single HDPE (high density polyethylene) U-tubes were inserted in each borehole with spacers. The spacers were placed between the U-tube legs

at 10 m intervals to keep a shank spacing of 50 mm. The outer and inner diameters of the pipe legs were 34 and 27 mm, respectively. The BHE on the left side of the observation well was grouted with Portland cement mixed with 10% of fine silica sand (GR-BHE) while the BHE located on the right was backfilled with gravel of 8–15 mm (average 10 mm) grain size and a porosity of 0.38 (BF-BHE). The T-type thermocouples were installed at 10 m intervals in both the boreholes and the observation well to obtain additional information regarding the thermal behavior of the soil formation. To reduce the exchange of heat between the circulating fluid and the external environment, thus reducing the effect of diurnal variations in factors such as temperature, radiation, wind, and precipitation, both the hydraulic circuit located above the ground and the TRT apparatus were insulated. Water was used as the heat carrier fluid.

Table 1. Detailed parameters of the BHE setup and the soil

Parameter, [unit]	Value
Borehole heat exchanger	
Borehole depth, [m]	50
Borehole diameter, [mm]	165
U-tube	
Outer diameter, [mm]	34
Inner diameter, [mm]	27
Thermal conductivity, [W/(m·K)]	0.38
Volumetric thermal capacity, [MJ/(m^3·K)]	1.81
Shank spacing, [mm]	50
Heat carrier fluid: Water	
Thermal conductivity, [W/(m·K)]	0.6
Volumetric thermal capacity, [MJ/(m^3·K)]	4.2
Filling material	
Thermal conductivity of cement mixed with silica sand (mixing ratio 9:1), [W/(m·K)]	1.26
Thermal conductivity of saturated gravel (volume averaged), [W/(m·K)]	1.34
Porosity of gravel, [-]	0.38
Soil: Fine sand	
Porosity, [-]	0.35
Hydraulic conductivity, [m/s]	2.1E-04

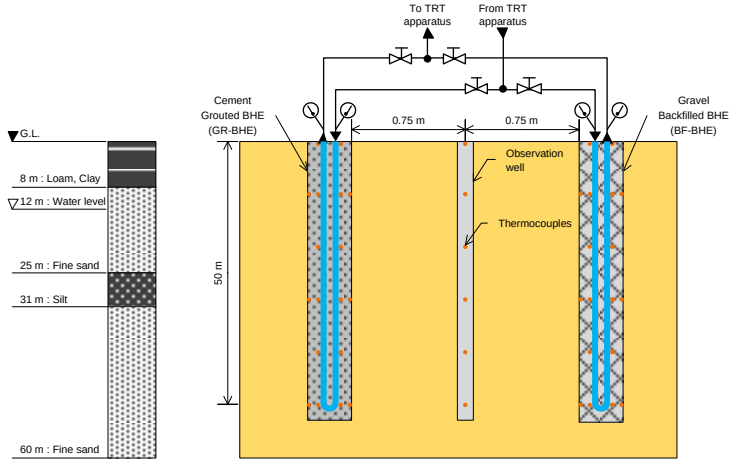

Figure 1: Schematic description of the experiment showing (a) the drill log of the experiment site and (b) a schematic representation of the experimental setup

2.2 Thermal Response Test Apparatus

The TRT apparatus was designed and constructed in 2014 and comprised a heating unit, a constant rate pump, a hydraulic circuit, a control circuit, an electrical circuit, and a measuring system (Figure 2). The heating unit consisted of three different plug heaters with a power of 2, 4, and 6 kW. The output could then be increased up to 12 kW at 2 kW intervals by on/off combinations of the three heaters. The power consumption of the heating unit was measured by the wattmeter. The magnetic drive pump was used for the circulation of the heat carrier fluid, operating at a constant flow rate and a power consumption of 0.36 kW. The flow rate was controlled by the bypass loop (Figure 2) and measured with an electromagnetic flow meter. The platinum resistance temperature sensors (Pt-100) were installed in both the BHE and the TRT apparatus loops (Figures 1 and 2). Their use allowed the measurement of the actual heat injection rate to the BHE and the heat loss or gain in the hydraulic circuit above the ground. In addition, the temperature inside the TRT apparatus, the dry bulb temperature, the relative humidity, the global insolation, and the precipitation were measured. Data were recorded every 2 s.

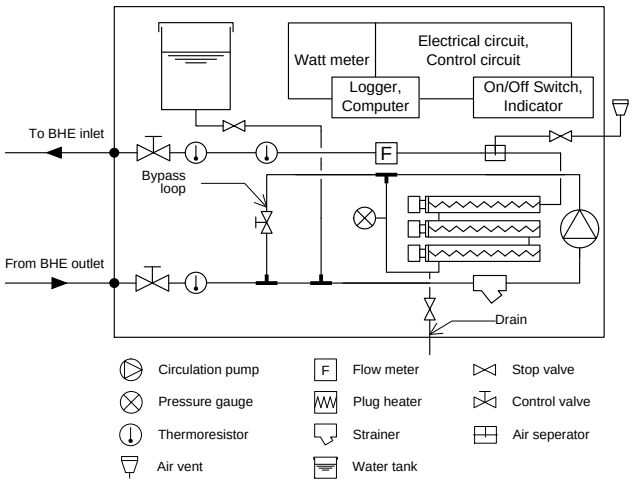

Figure 2: Schematic diagram of the TRT apparatus.

3. TRT DATA INTERPRETATION

3.1 Infinite Line Source Model with the Superposition Principle

The TRT data were interpreted on the basis of the infinite line source (ILS) model (Carslaw and Jaeger, 1959). The analytical solution based on the thermal diffusion equation, which describes the transient temperature rise of the infinite homogeneous medium by the infinite line source is described by the following equation:

$$T(r,t) - T_0 = \frac{q_{ave}}{4\pi\lambda}\,\mathrm{Ei}\left(\frac{c_s r^2}{4\lambda t}\right) \tag{1}$$

where T: temperature of the soil, T_0: initial temperature of the soil, q_{ave}: heat injection rate per unit length, λ: thermal conductivity of the soil, α: thermal diffusivity of the soil, Ei: exponential integral, r: distance from the heat source, and t: elapsed time after the heat injection.

The temperature in the borehole wall ($r = r_b$) is denoted by T_r, such that equation (1) can be re-written in terms of T_r:

$$T_r(t) = \frac{q_{ave}}{4\pi\lambda}\,\mathrm{Ei}\left(\frac{c_s r_b^2}{4\lambda t}\right) + T_0 \tag{2}$$

where T_r: temperature in the borehole wall and c_s: volumetric thermal capacity of the soil.

Assuming that the heat transfer between the heat carrier fluid and the borehole wall is at steady state, the borehole thermal resistance R_b can be defined as follows:

$$\frac{T_f(t) - T_r(t)}{q_{ave}} = R_b \tag{3}$$

where $T_f(t)$: average temperature of the heat carrier fluid, $T_f(t) = 0.5\left(T_{f_{in}}(t) + T_{f_{out}}(t)\right)$.

By substituting T_r in equation (2) according to equation (3) the ILS solution with respect to the temperature of the heat carrier fluid can be obtained:

$$T_f(t) = \frac{q_{ave}}{4\pi\lambda}\,\mathrm{Ei}\left(\frac{c_s r_b^2}{4\lambda t}\right) + R_b \cdot q_{ave} + T_0 \tag{4}$$

The most popular method to estimate the effective thermal conductivity of the soil and the borehole thermal resistance is by approximating the exponential integral in equation (4). The exponential integral can be described as the sum of the infinite series as follows:

$$\mathrm{Ei}(x) = \int_x^\infty \frac{e^{-v}}{v}\,dv = -\gamma - \ln x + \sum_{k=1}^{\infty} \frac{(-1)^{k+1} x^k}{k \cdot k!} \tag{5}$$

where, γ: the Euler-Mascheroni's constant (≒0.5772).

For the practical use, if considering only first two terms in equation (5), then approximated form of equation (4) can be obtained.

$$T_f(t) = \frac{q_{ave}}{4\pi\lambda}\ln(t) + \frac{q_{ave}}{4\pi\lambda}\left\{\ln\left(\frac{4\lambda}{c_s r_b^2}\right) - \gamma\right\} + R_b \cdot q_{ave} + T_0 \tag{6}$$

According to the equation (6), the mean temperature of the heat carrier fluid T_f varies linearly with the natural logarithm of time. Therefore, the effective thermal conductivity of the soil λ_{eff} can be estimated from the gradient k of the temperature response curve versus the natural logarithm of time, estimated from linear regression (e.g., the least square method), using equation (7):

$$\lambda_{eff} = \frac{q_{ave}}{4\pi k} \tag{7}$$

The appropriate starting time for the estimation was a matter of debate. We considered 15 h, based on the time criterion of $t \geq 5\,r_b^2/\alpha$, which is used for approximating the exponential integral in the ILS solution. After estimating the effective thermal conductivity of the ground, the effective borehole thermal resistance R_b was estimated from equation (6).

The gradient method cannot eliminate or take into account the disturbance induced by the changes (e.g., temperature, radiation, wind, precipitation) in the external environment surrounding the location at which the TRT and hydraulic circuit were installed, because even a well-insulated pipe will exchange heat with the external environment. The voltage fluctuation from the power grid might also affect the quality of the experiment. A few previous studies have attempted to consider heat exchange with the external environment. However, such studies required complicated preprocessing of the data and could not take into account the voltage fluctuation (Roth et al., 2004), (Bandos et al., 2011). In this study, we took into account rather than excluded the disturbance. The principle of superposition and the parameter estimation method were used to consider a variable heat injection rate.

For an accurate measurement of the heat injection rate, the temperature sensors must be installed close to the BHE loop as shown in Figure 1. The actual heat injection rate of the BHE can then be determined using equation (8):

$$Q_{BHE}(t) = q(t)H = c_f \dot{V}(t)\left(T_{f,in,BHE}(t) - T_{f,out,BHE}(t)\right) \tag{8}$$

where Q_{BHE}: actual heat injection rate to the BHE, H: length of the BHE, c_f: volumetric heat capacity of the heat carrier fluid, and $\dot{V}$: volumetric flow rate, $T_{f,in,BHE}$: fluid temperature at the inlet of the BHE, $T_{f,out,BHE}$: fluid temperature at the outlet of the BHE.

Eskilson considered variable heat injection rates in his work (Eskilson, 1987) by applying a temporal superposition using Duhamel's theorem (Hahn and Ozisik, 2012). The variable heat injection rate can then be regarded as piece-wise constant square pulses. Then, the heat pulses, subdivided in N different intervals, are superimposed to obtain a temperature response corresponding to the variable heat rate. The ILS solution considering a variable heat rate is as follows:

$$T_{f,var}(t) = \sum_{n=1}^{N} \frac{q_n - q_{n-1}}{4\pi\lambda_{eff}} \,\mathrm{Ei}\left(\frac{c_s r_b^2}{4\lambda_{eff}(t - t_{n-1})}\right) + R_b \cdot q_N + T_0 \tag{9}$$

3.2 Parameter Estimation Method

The thermal resistance of the BHE and the effective thermal conductivity of the soil were inversely estimated using the numerical quasi-Newton method. This method approximates the Hessian instead of solving it exactly. Even though the quasi-Newton method approximates the Hessian, which can sometimes be a cumbersome and expensive computation, it mimics the true property of the true Hessian (Nocedal and Wright, 2006). Therefore, it can reach a solution faster. Unlike the recursive fitting method for the whole test period, which provides only one solution, the developed estimation program was executed for every time step starting only from t = 20 h, because the ILS solution cannot predict the temperature response of the early time. The estimation stopped when the squared difference between the ILS estimated temperature (equation (9)) and the experimental temperature became less than 10^{-5} for each discrete time step. The objective function is defined as:

$$\min f_{obj}(\lambda_{eff}, R_b) = \left(T_{f,exp}(t) - T_{f,var}(\lambda_{eff}, R_b, t)\right)^2 \leq 10^{-5} \tag{10}$$

The values estimated from the gradient method described in equation (7) were used as initial guess values for the parameter estimation. The initial search ranges were λ_{eff}±0.5 W/(m·K) and R_b±0.05 m·K/W.

4. RESULTS FROM THE TRT

4.1 Test Condition

The experiment conditions are described in Table 2. The TRTs were conducted four times, twice for each BHE, using the 2 kW and 4 kW heaters. To verify the thermal behavior of the BHE, the experiments were continued for a relatively long period of 140 h. The flow rate was set to about 20 L/min but it increased as the temperature of the circulating fluid went up. The increasing flow rate was due to the decrease in the viscosity of water with increasing temperature. The T-type thermocouples installed in the BHEs and the observation well measured an initial ground temperature in the range 16–17 °C. However, there was a seasonal temperature variation above 10 m depth. In this study, the initial ground temperature was set to 16.5 °C. The given heat injection and flow rates correspond to values averaged over the heat injection period (Table 2). Once a test was finished, the following test started, after confirming that the ground temperature had returned to the initial value.

Table 2. Experimental conditions for the four TRTs

Test number [BHE-Heater]	Injection starting time [Year/month/day/hour]	Duration [h]	Heat injection rate [kW]	Flow rate [L/min]
BF4	2014/02/12/21:30	140	4.2 (≒84 W/m)	21.5
GR4	2014/03/25/15:40	140	4.2 (≒84 W/m)	21.9
BF2	2014/04/09/16:00	140	2.0 (≒40 W/m)	19.6
GR2	2014/05/15/22:00	140	2.3 (≒46 W/m)	19.8

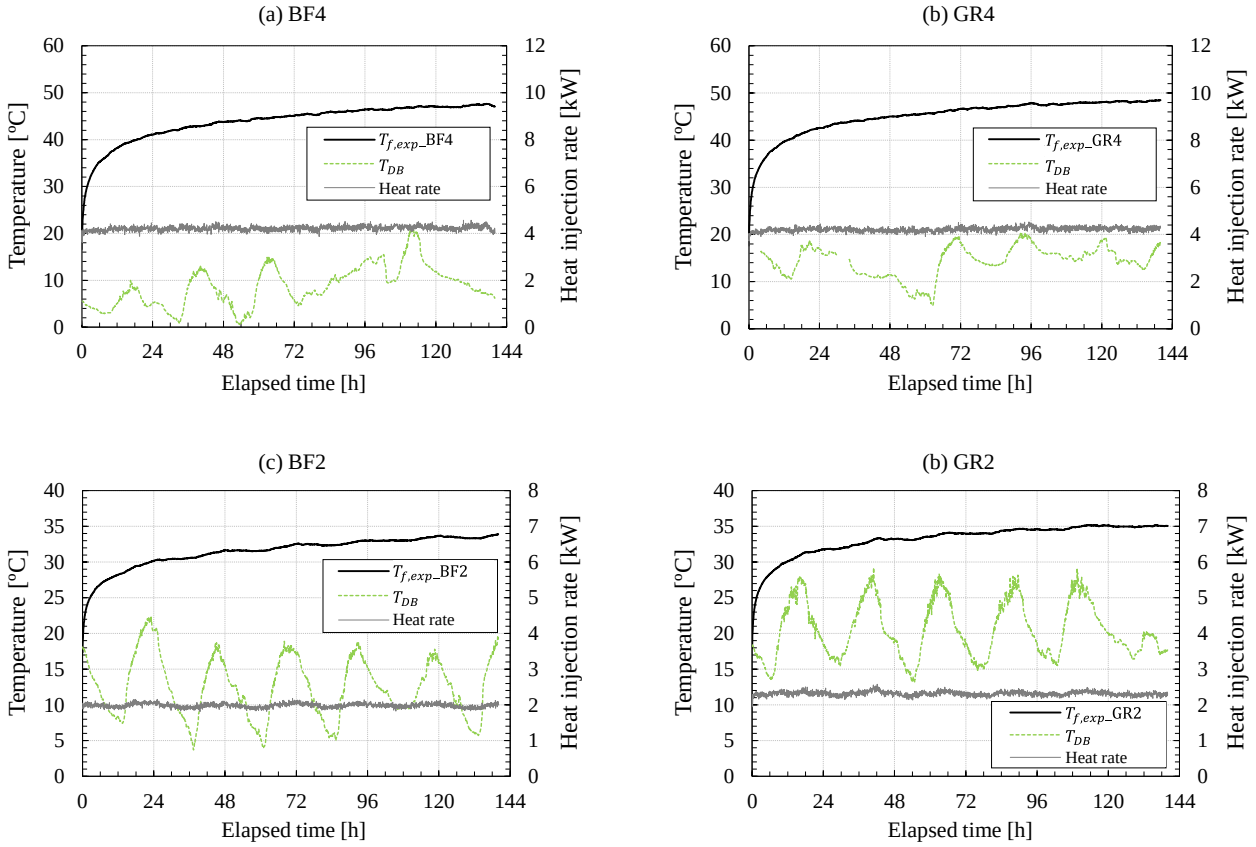

Figure 3: Average water temperature, heat injection rate, and dry bulb temperature of the four TRTs

4.2 Analysis of the Test Result

The average circulating water temperature, heat injection rate, and dry bulb temperature of the four tests are shown in Figure 3. The actual heat injection rates of BF4 and GR4 were almost the same (Table 2). Assuming that the thermal conductivity of the soil around the two BHEs was the same, we can intuitively guess that the borehole thermal resistance of BF-BHE was lower than that of GR-BHE, because the temperature curve of BF4 exhibited lower values than the GR4 curve.

The BF4 and GR4 tests were carried out in the winter season, when the diurnal temperature amplitude is typically narrower. Therefore, there was little disturbance from the external environment and the temperature response curve was smooth without low frequency oscillations due to the interaction with the environment. On the other hand, BF2 and GR2 were carried out in the spring season when the diurnal temperature amplitude is wider. A coupling between the temperature response and the external environment was clearly seen (Figures 3c and d). This effect can be further studied by estimating the thermal conductivity and the borehole thermal resistance using the sequential plot method. The sequential plot is a method of forward stepwise evaluation with a fixed starting time (Shonder and Beck, 2000), (Sanner et al., 2005). We assumed a starting time of t = 15 h and the gradient k from equation (7) was determined using the least square method.

The sequential plot from the data of BF4 and BF2 is shown in Figure 4. GR4, which had little influence from the external environment converged around t = 60 h (Figure 4). In contrast with the fast convergence of BF4, the sequential plot of BF2 kept oscillating constantly. In the sequential plot of GR2, almost the same oscillation was observed (data not shown). Therefore, no conclusion can be drawn regarding the end time of the test or which value to use for the design of the BHE. The final estimated effective thermal conductivities and borehole thermal resistances using the sequential plot are summarized in Table 3.

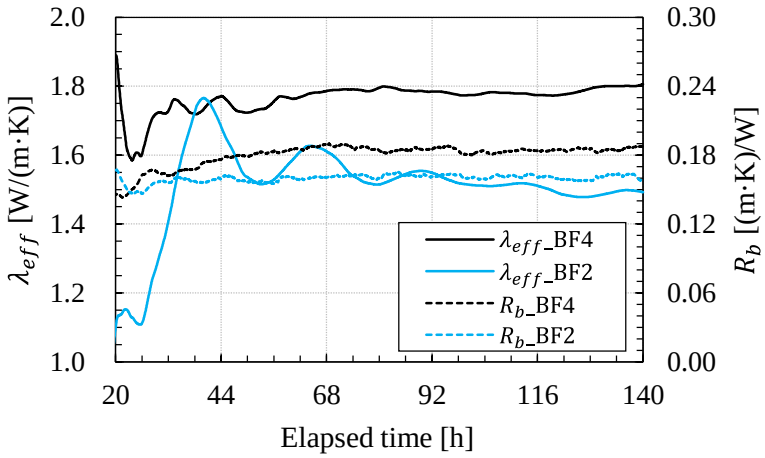

Figure 4: Sequential estimates of the effective thermal conductivity and the borehole thermal resistance using the approximated ILS model (starting time: t = 15 h)

Table 3. Parameters estimated by the gradient method

Test number [BHE-Heater]	Thermal conductivity [W/(m·K)]	Borehole thermal resistance [m·K/W]
BF4	1.81	0.157
GR4	1.95	0.188
BF2	1.49	0.199
GR2	1.83	0.199

To overcome the influence from the external environment, the parameter estimation technique was applied. As a numerical search technique, the quasi-Newton method was used. The initial guess values used for the parameter estimation were based on the estimated values using the gradient method (Table 3) and equation (10). The initial search ranges were λ_{eff}±0.5 W/(m·K) and R_b±0.05 m·K/W. The first 20 h of simulation were not included because the ILS model cannot reproduce the initial thermal response accurately. The timestep interval was 15 min. Figures 5 and 6 show the estimated values for all timesteps. The final estimated values are summarized in Table 4. Unlike the values estimated with the ILS model (Figure 4), there was no oscillating behavior of the values estimated with the parameter estimation technique using the quasi-Newton method (Figure 5 and 6).

The estimated thermal conductivity for the BF-BHE was a little higher than that for the GR-BHE (Table 4), maybe due to a local difference in the strata configuration. Another possibility is unsaturated conditions above 12 m depth. In the GR-BHE, the annulus space between the U-tube and the soil was packed with the cement grouting, making good thermal contact between the heat carrier fluid and the soil. However, for the BF-BHE, the formation beyond 12 m depth was not saturated (i.e., the gravel that filled the annulus space had void space filled with air). Because of the poor thermal contact, the thermal response of the soil above 12 m depth was not fully captured. The difference between the thermal conductivity from the BF-BHE and the GR-BHE was small. However, the value for BF2 was about 0.3 W/(m·K) lower than that for the GR-BHE, as also confirmed by the decreasing trend in effective thermal conductivity (Figure 4). However, it is difficult to determine the cause of this phenomenon, because no clear trend was observed for the BF4 experiment, which used the same BHE. We plan to repeat this experiment.

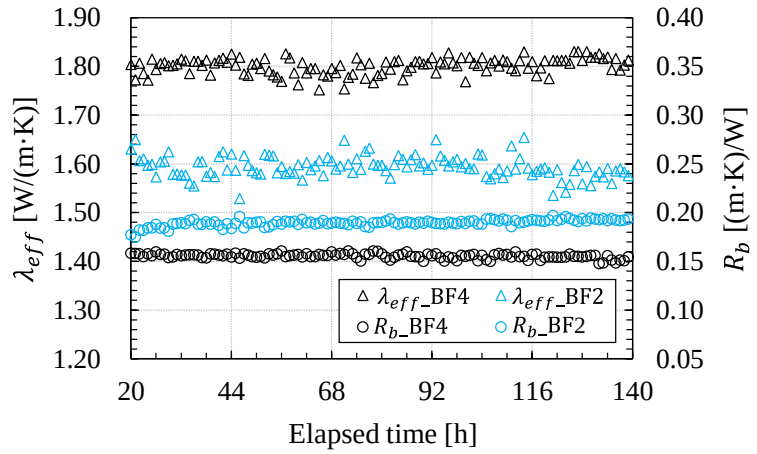

Figure 5: Estimated effective thermal conductivity and borehole thermal resistance using the parameter estimation technique (BF4 and BF2)

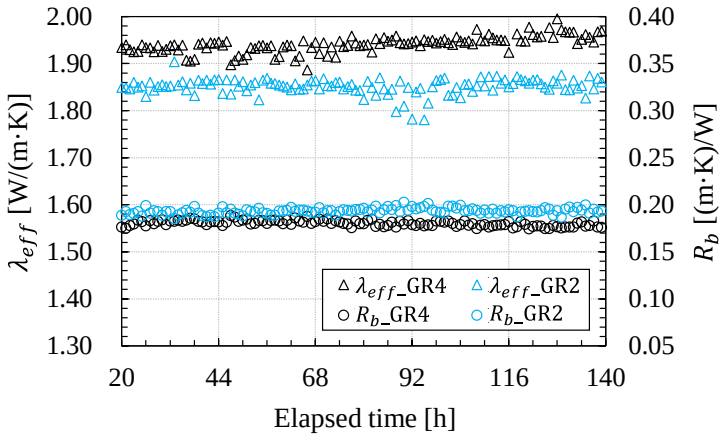

Figure 6: Estimated effective thermal conductivity and borehole thermal resistance using the parameter estimation technique (GR4 and GR2)

Table 4. The estimated effective thermal conductivity and borehole thermal resistance for the final timestep

Test number [BHE-Heater]	Thermal conductivity [W/(m·K)]	Borehole thermal resistance [m·K/W]
BF4	1.81	0.154
GR4	1.97	0.177
BF2	1.58	0.192
GR2	1.87	0.192

We obtained an interesting result regarding the borehole thermal resistance. The experiments using the 2 kW heater (BF2 and GR2) showed similar borehole thermal resistances (Table 3)**.** However, when the 4 kW heater (BF4 and GR4) was used, there was a decrease in the borehole thermal resistance compared with BF2 and GR2. In the case of BF4, which was filled with gravel, the borehole thermal resistance was 20% lower than for BF2. From this result, we conclude that filling the annulus with a porous medium is a very good configuration for BHEs in saturated conditions. Even though the annulus was not filled with a porous medium, the GR-BHE also showed a reduction in the borehole thermal resistance. The borehole thermal resistance of GR4 was about 8% lower than for BF2. This indicates that even though the annulus was not filled with a porous medium, when the geological formation is composed of a porous medium such as sandy soil, a little enhancement of the thermal performance of the BHE can be expected due to natural convection around the BHE.

5. DISCUSSION

In this study, the saturated formation corresponded to 76% of whole BHE length, so that the borehole thermal resistance of the BF-BHE was significantly reduced. This reduction in thermal resistance shortens the required length of a BHE, thereby reducing the initial investment cost of GSHP, which is the obstacle to a wider use.

When the backfilled configuration is applied, it is important to consider the output level of the heat pump, because our results were obtained at a relatively high heat injection rate of 84 W/m. The operation schedule must also be considered to prevent thermal depletion.

The cost savings involve not only a reduced drilling length, but also a reduced construction time. When filling the annulus with cement grouting, plastic shrinkage and settlement of the cement grouting were observed. This settlement may be due to permeation to the sandy soil. The filling operation must then be carried out intermittently to compensate for the lowered grouting level, taking 3 days to complete the filling in this study. Oppositely, the backfilled BHE only required the packing of the annulus with porous soil, which took about 1–2 h in this study, and represents a significant saving in terms of labor cost.

Further studies regarding the dependence of BHE construction on the thermo-hydro-geological properties of both the formation and backfill material (e.g., thermal conductivity, porosity and hydraulic conductivity), and length of the BHE are needed. However, in locations where the geological conditions are similar to this study, the application of a gravel backfilled BHE is highly recommended.

6. CONCLUSIONS

In this study, four TRTs were carried out to examine the effect of natural convection inside and around the BHE. Two different heat injection rates were applied to two different configurations of BHEs to determine the effect of the heat injection rate. The data from the TRTs were interpreted using a temporal superposition applied to the ILS model and a quasi-Newton numerical search method. Our main results can be summarized as follows.

1) When the annulus was filled with a porous medium such as gravel, the borehole thermal resistance was highly dependent on the heat injection rate: with a heat injection rate of 4.2 kW (84 W/m), the thermal resistance was reduced by 20% compared to that achieved with a heat injection rate of 2.0 kW (40 W/m). Therefore, the configuration of gravel backfilled BHE is a good option to apply in saturated porous geological conditions.

2) Even when the annulus was filled with cement grouting, natural convection in the soil around the BHE enhanced its performance when relatively high heat injection rate (84 W/m) were applied.

3) The disturbance caused by temperature variations in the external environment can be appropriately taken into account using the principle of temporal superposition and a numerical parameter estimation technique.

Further experimental and theoretical analysis of natural convection inside and around BHEs is planned for the future.

ACKNOWLEDGEMENTS

The authors wish to acknowledge the support by the New Energy and Industrial Technology Development Organization (Project No. P12004), the Kajima Foundation's Research Grant and the Research Fellowships from the Japan Society for the Promotion of Science for Young Scientists (Project No. 26·10535). We would also like to thank Mr. Y. Komaniwa for his advice on the construction of the TRT apparatus.

REFERENCES

Allan, M.L., and Kavanaugh, S.: Thermal Conductivity of Cementitious Grouts and Impact On Heat Exchanger Length Design for Ground Source Heat Pumps, *HVAC&R Res.*, **5**, (1999), 85–96.

Bandos, T. V, Montero, Á., Fernández de Córdoba, P., and Urchueguía, J.F.: Improving Parameter Estimates Obtained from Thermal Response Tests: Effect of Ambient Air Temperature Variations, *Geothermics*, **40**, (2011), 136–143.

Borinaga-Treviño, R., Pascual-Muñoz, P., Castro-Fresno, D., and Blanco-Fernandez, E.: Borehole Thermal Response And Thermal Resistance of Four Different Grouting Materials Measured with a TRT, *Appl. Therm. Eng.*, **53**, (2013), 13–20.

Carslaw, H.S., and Jaeger, J.C.: Conduction of Heat in Solids, Oxford University Press. Oxford University Press, U.K. (1959).

Eskilson, P., 1987. Thermal Analysis of Heat Extraction Boreholes. Department of Mathematical Physics, University of Lund, Sweden.

Gustafsson, A.-M., and Westerlund, L.: Multi-Injection Rate Thermal Response Test in Groundwater Filled Borehole Heat Exchanger, *Renew. Energy*, **35**, (2010), 1061–1070.

Gustafsson, A.-M., and Westerlund, L.: Heat Extraction Thermal Response Test in Groundwater-Filled Borehole Heat Exchanger – Investigation of the Borehole Thermal Resistance, *Renew. Energy*, **36**, (2011), 2388–2394.

Hahn, D.W., and Ozisik, M.N.: Heat Conduction, 3rd ed., John Wiley and Sons Inc. (2012).

Javed, S., Spitler, J.D., and Fahlén, P.: An Experimental Investigation of the Accuracy of Thermal Response Tests Used to Measure Ground Thermal Properties, *ASHRAE Trans.*, **117**, (2011), 13–21.

Nam, Y., Ooka, R., and Hwang, S.: Development of a Numerical Model to Predict Heat Exchange Rates for a Ground-Source Heat Pump System, *Energy Build.*, **40**, (2008), 2133–2140.

Nocedal, J., and Wright, S.J.: Numerical Optimization, 2nd ed., Springer, New York, (2006).

Roth, P., Georgiev, A., Busso, A., and Barraza, E.: First In Situ Determination of Ground and Borehole Thermal Properties in Latin America, *Renew. Energy*, **29**, (2004), 1947–1963.

Sanner, B., Hellström, G., Spitler, J.D., and Gehlin, S.: Thermal Response Test—Current Status and World-Wide Application, *Proceedings*, World Geothermal Congress, Antalya, Turkey, (2005).

Shonder, J.A., and Beck, J.V.: Field Test of a New Method for Determining Soil Formation Thermal Conductivity and Borehole Resistance, *ASHRAE Trans.*, **106**, (2000), 843–850.

Witte, H.J.L., Gelder, G.J. Van, and Spitler, J.D.: In situ Measurement of Ground Thermal Conductivity: A Dutch perspective, *ASHRAE Trans.*, **108**, (2002), 263–272.