State of the art of the high temperature heat pumps technology for geothermal district heating applications

Leszek Wojtan[1], Ulrich Pietrucha[1] and Carlo Piemonte[2]

[1] FRIOTHERM AG, Zürcherstrasse 12, 8401 Winterthur, Switzerland

[2] Studio Associato di Ingegneria – via Juvara 9, 20129 – Milano, Italy

leszek.wojtan@friotherm.com

Keywords: High temperature heat pumps, district heating, centrifugal compressor, ground water, Neocomien water, Dogger water,

ABSTRACT

It is well known that energy can be exploited from renewable low temperature heat sources like waste water, sea- or ground water with large centrifugal industrial type heat pumps. Centrifugal heat pump technology is approved and very reliable. Already since more than three decades centrifugal heat pumps are reducing CO_2 emissions and are supplying hot water up to 90°C to district heating systems. In most cases the heat is recovered from low temperature heat sources.

However, it is quite new to the public that with heat pump technology energy can also be exploited from high temperature heat sources like geothermal water. With an intelligent heat pump system the district heating return temperature can be boosted and at the same time the exploitation of the geothermal well can be increased.

In this paper three examples of large centrifugal heat pumps in district heating applications using ground, Neocomien and Dogger water will be presented.

1. INTRODUCTION

As presented by Wojtan et al. (2009) the first heat pump producing hot water at 120°C has been designed for the leading Italian polypropylene producer Himont by SULZER FRIOTHERM in 1985. The cooling water of a reactor at 59°C provided the heat source, from which heat was extracted in the refrigerant evaporator. This heat was then raised to a higher temperature by compression, after which was transferred in the condenser to the superheated water.

Bailer et al. (2006) showed also that the first heat pump producing hot water at 90°C extracting heat from raw sewage at 14°C was designed in 2005 by FRIOTHERM. The unit with the heating capacity of 18'400kW has been installed in Skøyen (Norway) producing basic load for the district heating.

The first two large capacity heat pumps UNITOP 43/28 using new generation of HFO R1234ze refrigerant has been successfully commissioned in 2012. The units with the total cooling capacity of 10'350 kW are producing chilled water at 2.5°C and feeding simultaneously 16'200 kW heat at 80°C into a district heating network of Fornebu Peninsula (Norway). If the cooling load is too low to produce the required heating capacity, the rest of heat may be extracted from sea water by means of an intermediate heat exchanger.

All above mentioned examples are tailor made heat pumps. The units have been customised to meet requirements of end users and guarantee the highest performance.

2. GEOTHERMAL HEAT PUMPS FOR DISTRICT HEATING

The presented below examples will show that the centrifugal heat pump technology enables the exploitation of geothermal water at very different temperatures and enables the heat upgrade to the temperature levels required in district heating applications.

2.1 Ground water

Ground water with the mean temperature of 14°C is the most cost-effective heat source from the investment point of view. In contrary to river or lake water the temperature of ground water is almost constant even in the winter period. In summer, ground water can be used for cooling of heat pumps in chiller-mode and rejected heat may be stored underground for reuse during the heating season. With a 2-stage units heat may be lifted up to 90°C.

Direct use of ground water as a heat source requires a special design of evaporator. However, installations with an intermediate heat exchanger between ground water and clean chilled water are also widely used. Even if there is an additional water loop and pump this solution offers a very good flexibility. Figure 1 and 2 show a simplified schema of two-stage heat pump with the heating capacity of 5'000kW designed for a project in the region Île-de-France. In winter and intermediate season the heat pump produces hot water

at 80°C and chilled water at 5°C simultaneously. As the cooling demand especially in winter is reduced, the required heat source capacity may be completed from the ground water by means of an intermediate heat exchanger. As shown in Figure 1, the compressors are connected in series producing very high isentropic lift. The coefficient of performance (COP) for heating is 3.0 and if the complete cooling capacity of 3'350kW may be used, the total COP for heating and cooling rises up to 5.0.

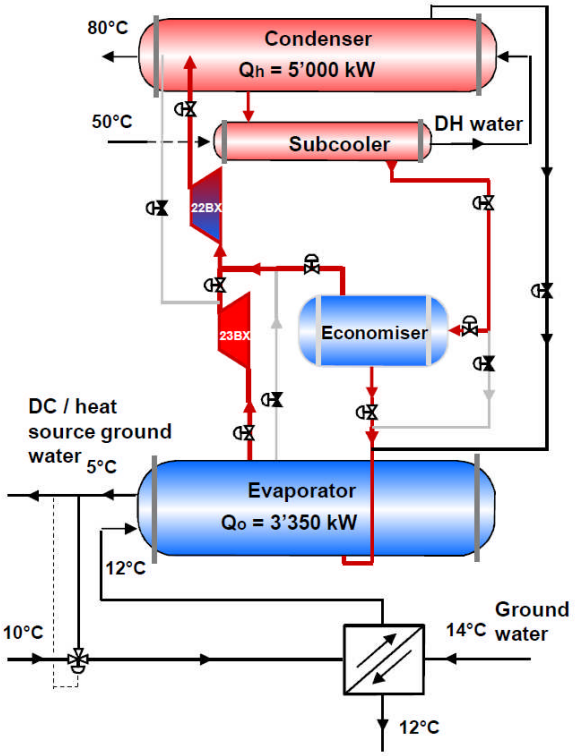

Figure 1: Simplified schema of heat pump UNITOP 23/22 in two-stage operation for hot water production at 80°C (project Île-de-France).

The cooling demand rises in summer and at the same time the need of heat recovery for sanitary water production is limited. As shown in Figure 2, the compressors may be connected during the summer period in parallel to increase the cooling capacity of the heat pump up to 6'200kW. Both compressors may be operated simultaneously or individually, what offers very effective partial load regulation. The condenser is cooled indirectly by the geothermal water pumped back to the geothermal well at 30°C. The switching from 2-stage (compressors in series) to 1-stage operation (compressors in parallel) is performed fully automatically by the combination of valves.

The performance data of the heat pump for both operating modes are shown in Table 1. It may be seen that in summer mode, the value of COP in 1-stage operation rises up to 5.1.

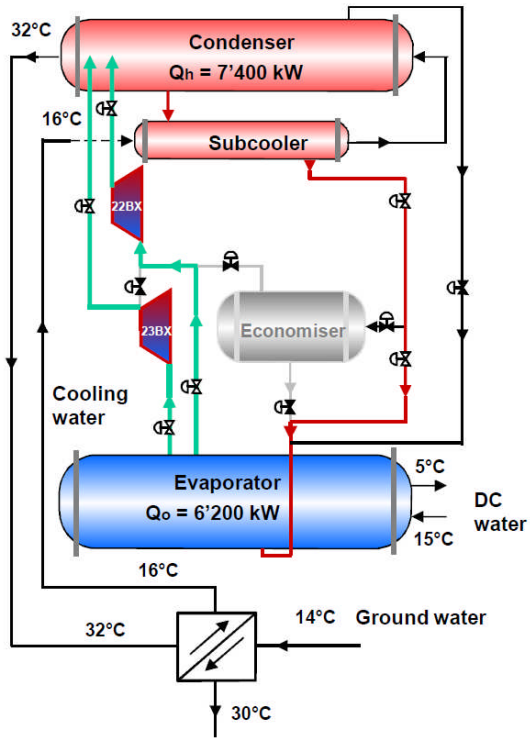

Figure 2: Simplified schema of heat pump UNITOP 23/22 in summer mode - 1-stage operation. Compressors in parallel. (project Île-de-France).

Table 1: Performance data of UNITOP 23/22

	Winter mode	Summer mode
Cooling capacity	3'350kW	6'200kW
Evaporator regime	12/5°C	15/5°C
Heating capacity	5'000kW	7'400kW
Condenser regime	50/80°C	16/32°C
COP cooling	2.0	5.1
COP heating	3.0	--
COP total	5.0	--

Figure 3 shows a general arrangement of UNITOP 23/22. The unit with the dimensions 3'800 x 9'000 x 3'200 may be delivered as a complete package ready for the installation on site. Thanks to the possibility of operation in different modes, very effective partial load conditions and the heat source balancing with geothermal water in winter, the heat pump adapts to very various operating conditions and can be operated all-the-year with the highest efficiency.

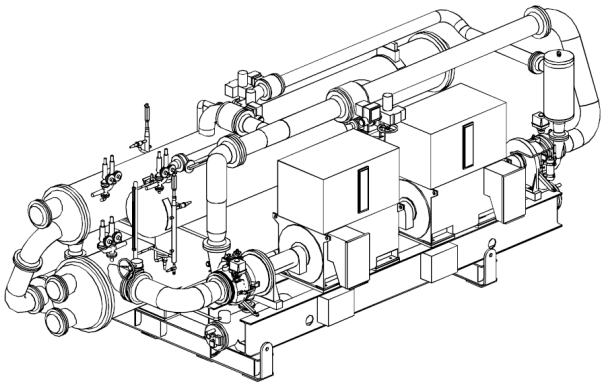

Figure 3: General arrangement of two-stage heat pump UNITOP 23/22 for hot water production at 80°C (Île-de-France).

2.2 Neocomien water

In February 2013 DALKIA commissioned the first geothermal installation using water from the Neocomian aquifer, which provides heat to 3'500 accommodations and two large public buildings. The heat source is water at 39°C with the volumetric flow of 200m^3/h exploited from a 900m deep geothermal well. The geothermal water is cooled down to 15°C in the evaporators of heat pumps and injected into a geothermal well. Figure 4 shows borehole drilling of injection well.



Figure 4: Borehole drilling of injection well (Le Plessis-Robinson).

The heat is then upgraded to 70°C by means of heat pumps. After the long study the solution with two FRIOTHERM's 1-stage heat pumps type UNITOP 22 has been chosen. As shown in Figure 5, the evaporators and condensers are connected counter-currently in series. This arrangement allows equalising of compressors isentropic lift and increases significantly the COP value. Between geothermal water and evaporator water an intermediate heat exchanger with a temperature gap of 1°C has been installed. The return temperature from district heating network varies between 40 and 50°C. The technical data of heat pumps are shown in Table 2.

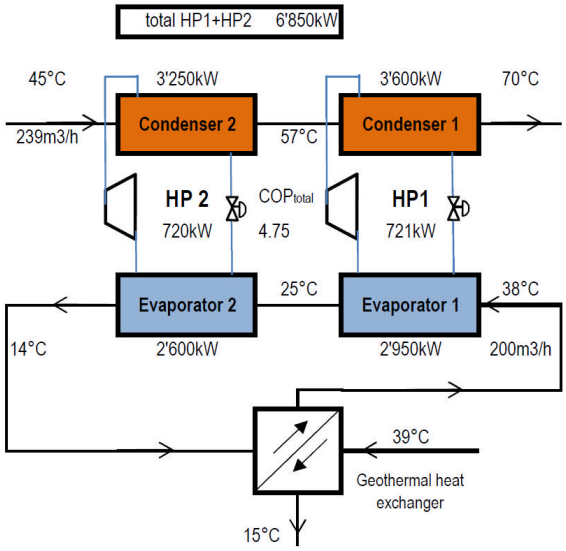

Figure 5: Heat pumps arrangement (Le Plessis-Robinson).

Table 2: Performance data of UNITOPs 22

	HP2	HP1
Cooling capacity	2'600kW	2'950kW
Evaporator regime	25/14°C	38/25°C
Heating capacity	3'250kW	3'600kW
Condenser regime	45/57°C	57/70°C
COP heating	4.50	5.00
COP total	4.75	

Figure 6 shows the annual heat duration curve for the district heating network of Plessis-Robinson. The maximum heating capacity of installed heat pumps 6'850kW with the partial load operation covers more than 78% of the annual heating demand. During the coldest days the complementary heat is produced by means of gas boilers. It is very important to design the heat pumps for the basic load of the district heating, what maintain the maximal number of operating hours with the highest heat pump/-s performance.

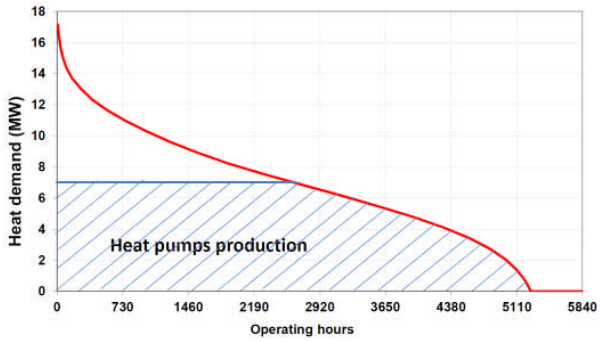

Figure 6: Annual heat load duration curve for Le Plessis-Robinson (DALKIA).

Figure 7 shows a general arrangement of 1-stage heat pump UNITOP 22 designed for Le Plesssis-Robinson. The dimensions of the heat pump are 5'400 x 2'000 x 3'000. The units have been designed to fit in the existing room of heating plant.

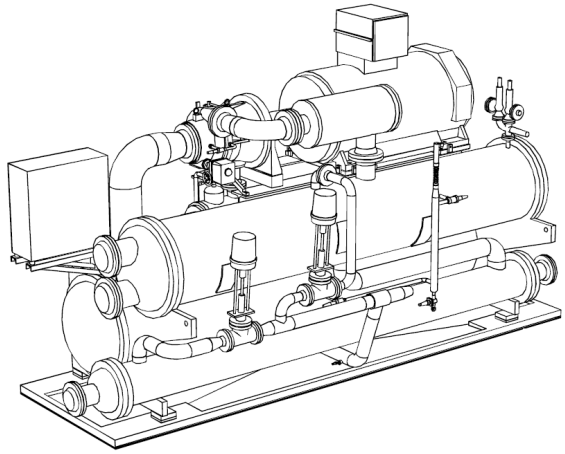

Figure 7: General arrangement of 1-stage heat pump UNITOP 22 for hot water production at 70°C (Le Plessis-Robinson).

2.3 Water from Dogger nappe

As found by Michard G. et all (1988), waters from the Dogger nappe of the Paris basin utilized for heating, have a chlorinity in the range 0.07-0.6 mole/litre and a temperature in the range 48-80°C. However, most of the Dogger geothermal wells provide water at temperatures around 70°C, what allows a direct use of geothermal heat transferred into a district heating network in the intermediate heat exchangers. The flows of geothermal water from the Dogger nappe of the Paris basin are in the range of 250 m^3/h.

Figure 8 shows titanium heat exchangers of a geothermal installation with Dogger water in the region Île-de-France. The volumetric flow of Dogger water is 280 m^3/h and the temperature oscillates around 76°C. Depending on the network return temperatures, the thermal power transferred into a district heating varies between 6'300 and 11'000kW.



Figure 8: Titanium heat exchangers of a geothermal installation with Dogger water.

The utilisation of geothermal heat in the most of district heating systems is limited by the high return temperature from the network. This effect in magnified especially during the winter time, when the return temperatures in some installations may increase even up to 60°C. As a consequence, geothermal water with a relatively high temperature has to be injected into a geothermal well.

An excellent solution to boost the geothermal wells' exploitation even at high return temperatures is offered by centrifugal heat pumps. The most efficient way of implementation, is the installation of heat pump for the cooling of district heating water before entering into a geothermal heat exchanger. Reduced district heating water temperature allows to recuperate more heat from geothermal water.

Figure 9 depicts such type of arrangement for the mentioned before installation in the region Île-de-France. The district heating water is cooled in the heat pump's evaporator from 55 to 37.5°C, then is reheated in two stages firstly by the geothermal water up to 67.2°C and finally in the condenser up to 89°C. In this case, the use of heat pump increases the exploitation of heat from geothermal water by 5'550kW.

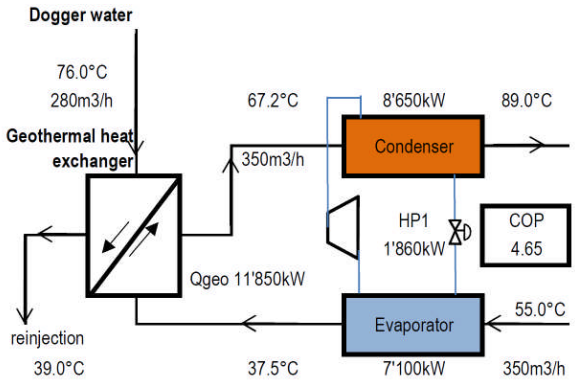

Figure 9: Heat pump arrangement for boosting of geothermal well exploitation.

Depending on the customer's needs, different heat pumps arrangement may be proposed.

Figure 10 presents a very effective use of the heat pump for a boosting of geothermal well exploitation in the district heating network with higher volumetric flow. The return flow is split into two streams. The evaporator gets the same volumetric flow as the flow of geothermal water and the rest flows through the condenser. The evaporator water is cooled down by 10.3°C and then is reheated by the Dogger water up to 71°C. The extracted heat in the evaporator is rejected by the heat pump into the condenser water, lifting its temperature up to 61.6°C. After that, both hot water streams flow together producing hot water at 67.5°C. The use of heat pump in this application increases the thermal power extracted from geothermal water by 3'000kW. As the required temperature lift is not high, the COP of the heat pump gives very high value of 6.3.

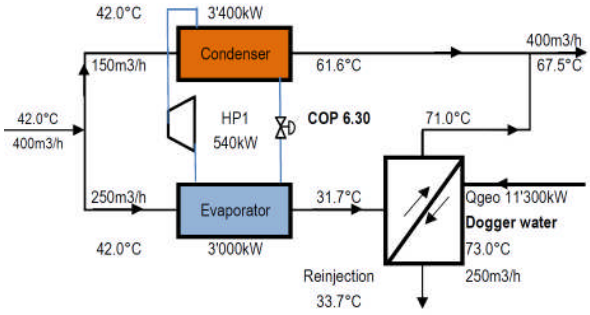

Figure 10: Heat pump arrangement for boosting of geothermal well exploitation for district heating network with higher volumetric flow.

It is obvious that volumetric flow and return temperature in district heating networks vary continuously. Thus, it is of crucial importance in the heat pump design to take into account all possible operating conditions.

Figure 11 shows the picture of the FRIOTHERM's heat pump type UNITOP 33C widely used in the high temperature geothermal applications.



Figure 11 Heat pump UNITOP 33C designed for boosting of geothermal well exploitation.

3. CONCLUSIONS

The presented high temperature centrifugal heat pump technology has been developed over the last 35 years and offers mature solutions for geothermal installation. The units enable the exploitation of heat from ground and Neocomian waters by upgrading it to the temperature levels required by the district heating networks. Furthermore, the heat pumps may significantly increase the exploitation of heat from Dogger water. As presented above, very different heat pumps arrangements are possible, depending on various parameters as: heat source temperature, heat source volumetric flow, required condenser outlet temperature, volumetric flow and return temperature of district heating water, partial load conditions and so on. Each geothermal project requires an individual study to optimise the heat pump design and its hydraulic implementation for the operation in all possible district heating conditions with the highest performance.

REFERENCES

Wojtan L. and Pietrucha U.: Large HPs using raw sewage or seawater as heat source, *Presentation on the European Heat Pump Summit 2009*, Nürnberg, Germany, 9-10 September, (2009).

Bailer, P. and Pietrucha U.: District heating and district cooling with large centrifugal chiller – heat pumps, *Proceedings of 10th International Symposium on District Heating and Cooling*, Hannover, Germany, 3-5 September, (2006).

Michard, G. and Bastide J.-P.:, Etude geochimique de la nappe du dogger du basin parisien, *Journal of Vulcanology and Geothermal Research*, Volume 35, issues 1-2, September, (1988), 151-163.