The EC REMINING-lowex project in Heerlen the Netherlands: development of a geothermal mine water pilot project to a full scale hybrid sustainable energy infrastructure Mine Water 2.0

René Verhoeven[1], Eric Willems[2], Virginie Harcouët-Menou[3], Eva De Boever[3], Louis Hiddes[1] , Peter Op 't Veld[2], Elianne Demollin[1]

[1] Mine Water Corporation Heerlen / PO Box 1 6400AA Heerlen The Netherlands

[2]Cauberg-Huygen Consulting Engineers / PO Box 480 6200AL Maastricht The Netherlands

[3] VITO / Boeretang 200 2400 Mol Belgium

Email: rene.verhoeven@triskill.nl / e.willems@chri.nl

Keywords: Geothermal energy, mine water; smart heat and cold grid, energy storage.

ABSTRACT

For the last 10 years numerous research and commercial initiatives have been undertaken in Europe in relation to development of the low temperature resources in coal mining fields. One of the most successful of them is the mine water project in Heerlen, the Netherlands, where a low-temperature district heating system was launched in operation in October 2008, under the European Interreg IIIB NWE programme. Other projects are carried out in Germany, Spain, France and Russia. Continuation of research on utilization of geothermal energy from abandoned coal mines is one of the goals of the 6th Framework Program project EC REMINING-lowex (Redevelopment of European Mining Areas into Sustainable Communities by Integrating Supply and Demand Side based on Low Exergy Principles). In this project are participating four local communities from the Netherlands, Slovenia, Poland and Bulgaria. The main goal is to demonstrate the use of locally available low valued renewable energy sources, specifically water from abandoned mines for heating and cooling of buildings. The system is based on low exergy principles and is facilitated by a fully integrated design of buildings, building services and energy conversion principles.

The mine water project in Heerlen is now being upgraded from a straight forward pilot system to a smart grid in heating and cooling with a full scale hybrid sustainable energy structure called Mine Water 2.0. We provide with 4 new connections in 2013 – 2014. In 2015 in total 500.000 m^2 floor area will be provided with mine water, which has a CO_2 emission reduction of 65% on heating and cooling for these connections. The Mine Water 2.0 system will become an essential part of the Sustainable Energy Structure Plan of Heerlen which reaches out towards 2040 and has the following landmarks:

- Application of cluster grids for energy exchange between buildings.
- Application of the mine water grid for energy exchange between cluster grids and supply and disposal of heat and cold to and from the mine reservoirs.
- Poly generation e.g. bio-CHP and solar energy (PV and thermal), feed in of local available industrial waste heat and cooling towers for peak cold demands.
- Enlargement of the hydraulic and thermal capacity of the mine water grid through improving well pumps, pressure boosting systems and reuse of the existing mine water return pipe for additional supply and disposal of hot mine water.
- Fully automatic and demand-driven double-acting supply of heat and cold to buildings through usage of pressure buffer systems at the extraction wells and sophisticated injections valves at the injection wells.
- All mine water installations (buildings, clusters, wells) are equipped with sophisticated process control units that communicate with a Central Monitoring System (CMS) that connects these geographically dispersed subsystems. A very new application in the building environment.

The development of the Mine Water 2.0 structure is in progress at this very moment. The development takes place within a sound business case where the Mine Water Corporation is in the position to present competitive offers to building owners to attach to the mine water system.

In Q1/2 2013 the first cluster with 2 new building connections will be ready. In June 2013 at the congress we will be able to share the first experiences.

1. INTRODUCTION

For the last 10 years numerous research and commercial initiatives have been undertaken in Europe in relation to development of the low temperature resources in coal mining fields. One of the most successful among them is the Mine water Project in Heerlen, the Netherlands, where a low-temperature district heating system was launched in operation in October 2008, under the European Interreg 3B NWE programme. Other projects are carried out in Germany, Spain, France and Russia. Continuation of research on utilization of geothermal energy from abandoned coal mines is one of the goals of the 6th Framework Program project EC REMINING-lowex (Redevelopment of European Mining Areas into Sustainable Communities by Integrating Supply and Demand Side based on Low Exergy Principles). In this project are participating four local communities from the Netherlands, Slovenia, Poland and Bulgaria. The main goal is to demonstrate the use of locally available low valued renewable energy sources, specifically water from abandoned mines for the heating and cooling of buildings. The system is based on low exergy principles and is facilitated by a fully integrated design of buildings, building services and energy conversion principles.

2. MINE WATER 1.0

Mine Water 1.0 is the term we use for the initial mine water system at Heerlen, developed in de period 2003 - 2008. It was a straight forward pilot system to investigate how the mine water of the abandoned coal mine Oranje Nassau III could be used as a geothermal source for the sustainable low-exergy heating and cooling of buildings.

Five wells were drilled to the stone drifts in the underground. Two hot wells in the northern part of Heerlen with a depth of 700 meters below surface for the extraction of hot water with a temperature of about 28 °C, two cold wells in the southern part of Heerlen with a depth of 250 meters for the extraction of cold mine water with a temperature of about 16 °C. A fifth well in the middle part of Heerlen with a depth of 350 meters is used for the injecting of the cooled hot and warmed cold mine water with intermediate temperatures between 18-22 °C.

Figure 1 shows the 3-D model of the mine water reservoirs. The simulations are conducted by using a numerical model in which the detailed geometry of the relevant stone-drifts and shafts has been incorporated (based on the original mine maps). The used model reflects the status and knowledge acquired until mid-2012. It has been calibrated based on pump tests that have been conducted in the early stages of the project and past production periods.

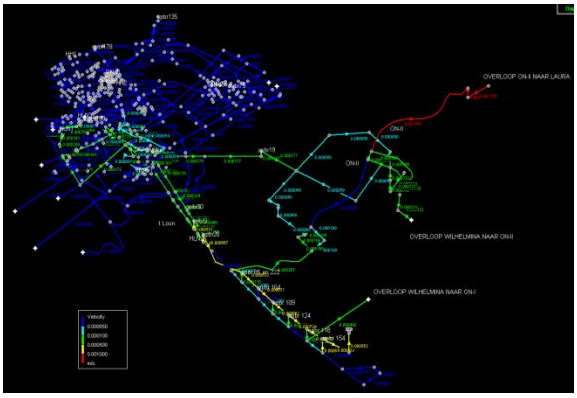

Figure 1. 3D model of the underground geometry of the mines with overview of the flow and initial temperature conditions (VITO).

Through a three-pipe mine water distribution network of seven kilometers in length, the so called mine water backbone, the mine water from the wells is provided to the energy stations of the connected buildings. One pipe for delivery of hot mine water (insulated) from the hot wells HH1 and HH2, one pipe for the delivery of cold mine water (non-insulated) from the cold wells HLN1 and HLN2 and one return pipe (non-insulated) to return the used mine water (hot and cold) to the injection well HLN3. Energy exchange in the energy plant of the end-users takes place through heat exchangers. The hot mine water is cooled down by 10 °K and the cold mine water is heated up by 6 °K.

Until 2012 one hot well HH1, one cold well HLN1 and the return well HLN3 were in operation with two end-users: the office of the Central Bureau of Statistics (CBS; 22.000 m^2) and the complex Heerlerheide Centrum (HHC; homes, supermarket, offices, community facilities, catering; 30.000 m^2). Heat pumps in each building are used to provide the base load of heat and cold at the demanded low-ex temperatures.



Figure 2. The energy station is situated in the basement of the Heerlerheide Centrum (HHC)

Figure 3 shows the Mine Water 1.0 system in geographical perspective.

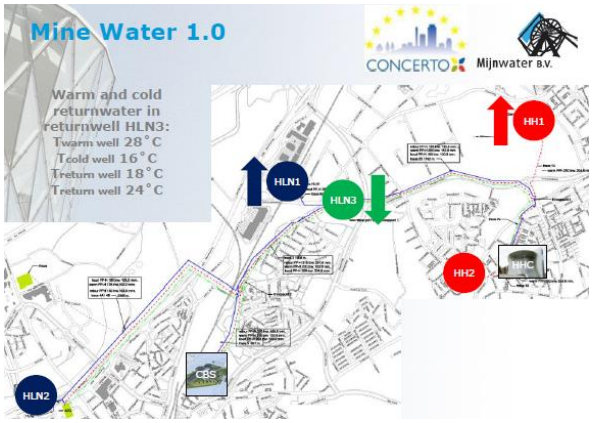

Figure 3. Mine Water 1.0 in geographical perspective

Figure 4 shows an animation of the cross section of the mine water reservoirs with the typical flow pattern of the Mine Water 1.0 system.

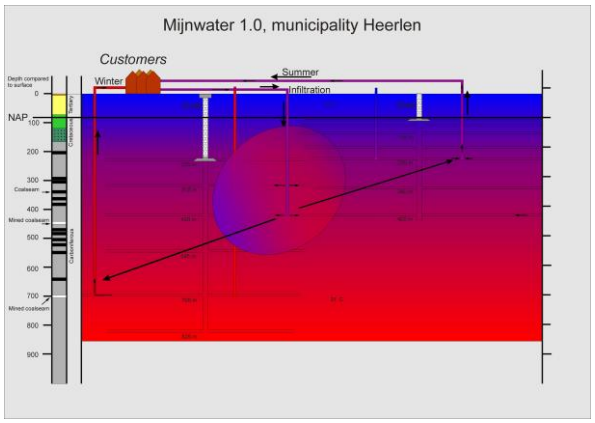

Figure 4. Cross section mine water reservoirs with flow pattern Mine Water 1.0

The model takes into account heat transfer by advection, mixing of waters with different temperatures and heat conduction (exchange of heat between rock and water). In excellent operation conditions when the different parts of the reservoir are systematically allowed to rest, the perturbations following injection or production seem to be equilibrated by conduction effects (Figure 5, conduction factor Kb = 0.002). In the Mine Water 1.0 operation mode, however, water with intermediate temperatures is returned to the HLN3 well. This will affect the sustainable production of warm water at HH1 and certainly the production of cold water from HLN1, which is closely connected to the HLN3 shaft. As a consequence, when waters with anomalous temperatures are injected and circulated the reservoir starts to homogenize. The warm buffer at HH2 and cold buffer at HLN2 are in this case not sufficient to compensate for this temperature evolution. To illustrate this effect, a scenario is shown in Figure 5 in which the conduction factor is zero (Kb = 0). These scenarios represent an extreme situation. In practice we observe that the use of the HLN3 well is an important parameter that makes the operation of the mine water less attractive for energy efficient applications.

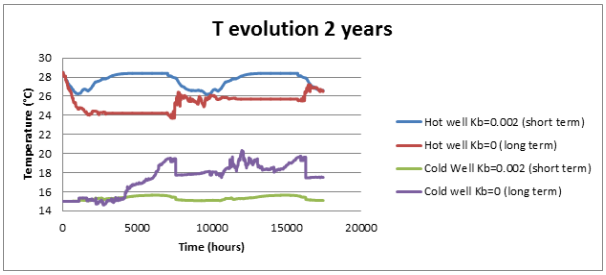

Figure 5. Temperature evolution of the hot (HH1) and cold (HLN1) production wells for different conduction factors (VITO).

Other restrictions of the Mine Water 1.0 system are:

- Limited hydraulic and thermal capacity;
- Not energy demand-driven (simple change-over system):
  - Summer period April till September only cooling;
  - Winter period October till March only heating;
- No possible energy exchange between buildings.

3. MINE WATER 2.0

Mine Water 2.0 indicates that the mine water project in Heerlen is now being upgraded to a full scale smart grid in heating and cooling or in other words the development of a hybrid sustainable energy structure with a sound business case. Smart grid and hybrid energy structure means demand driven energy reuse and exchange between buildings, combined with poly generation.

In 2013 – 2014 4 new connections will be realized. In 2015 we aim to provide a total of 500.000 m^2 floor area. This results in a CO_2 emission reduction of 65% for these connections on heating and cooling. The Mine Water 2.0 system will also become an essential part of the Sustainable Energy Structure Plan of Heerlen witch reaches out to 2040.

To achieve this and to overcome the restriction of the Mine Water 1.0 system a total new concept Mine Water 2.0 is developed in 2012, based on:

- Energy exchange instead of energy supply;
- Energy storage instead of depletion;
- Addition of poly generation to the system;
- Maximizing the hydraulic and thermal capacity (reservoirs, wells and distribution backbone);
- Fully automatically controlled and demand driven system (heat and cold supply at any time).

3.1 Energy exchange, storage and regeneration of wells

Energy exchange will be realised by means of:

- Local cluster grids for instant energy exchange (heat and cold) between the connected buildings in the cluster.

- Application of the existing mine water backbone for energy exchange (heat and cold) between the geographically dispersed cluster grids.

Another important advantage of cluster networks is that these are closed systems and can be run with clean water. In cluster grids no special materials resistant to the corrosive mine water are needed like stainless steel (AISI 316) or plastic (PE or PP). Application of cast iron and a provision for simple water treatment are sufficient. This means an important cost reduction of the cluster grid.

Energy storage
The extraction wells (HH1 and HLN1) supply the shortage of heat and cold to the mine water backbone. Surplus of heat and cold will be stored in the corresponding mine water reservoirs though the injection wells (HH2 en HLN2). The current return/injection well HLN3 will be out of order and only be used in case of exceptional situations.

Regeneration
Mine Water 2.0 needs to be future proof. Unwanted intermediate return temperatures as applied in de current Mine Water 1.0 system cause depletion of the mine water reservoirs. To eliminate this effect it is necessary that the used return mine water is heated up or cooled down properly to the natural geothermal temperature and brought back to the corresponding heat or cold reservoir. It is also important that the heat and cold extraction and infiltration has to maintain a sort of energy balance. In other words it is important that the mine water reservoirs are regenerated preferable on a yearly basis.

Determinative for the correct water return temperatures to the mine water reservoir is the operation of the energy stations of the end-users. They have to ensure that the hot water is cooled down (< 16˚C) and heated up (> 28˚C) sufficiently. This is included as one of the conditions in the contract for end users of mine water.

Figure 6 shows the final situation of Mine Water 2.0.

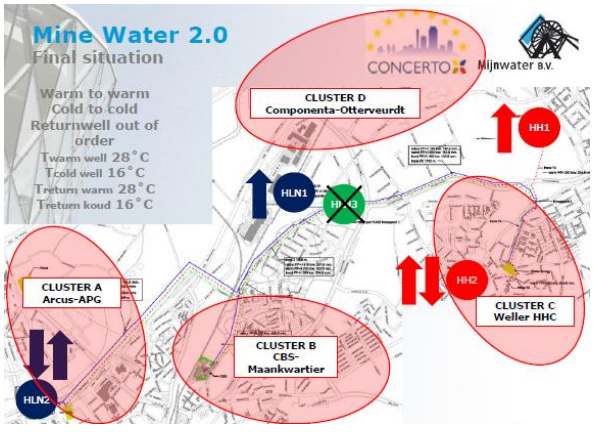

Figure 6. Final situation of Mine Water 2.0.

Figure 7 shows an animation of the cross section of the mine water reservoirs with the enhanced flow pattern of the Mine Water 2.0 system.

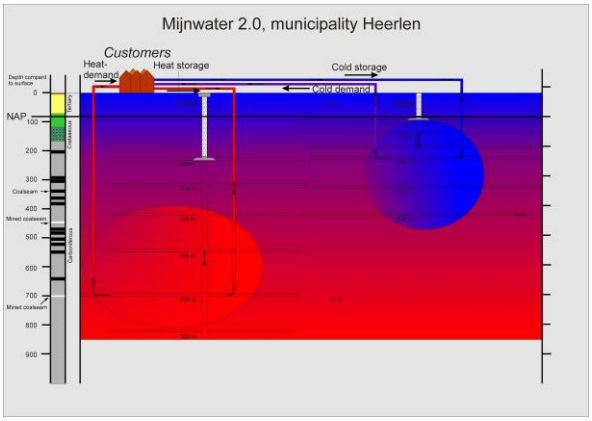

Figure 7. Cross section mine water reservoirs with flow pattern Mine Water 2.0

With this flow pattern practically no exchange between the hot and cold reservoir takes place because injection and extraction take place in the same reservoir and built up a hot and cold bubble.

Figure 8 shows the status of the Mine Water 2.0 project as in realization at this moment.

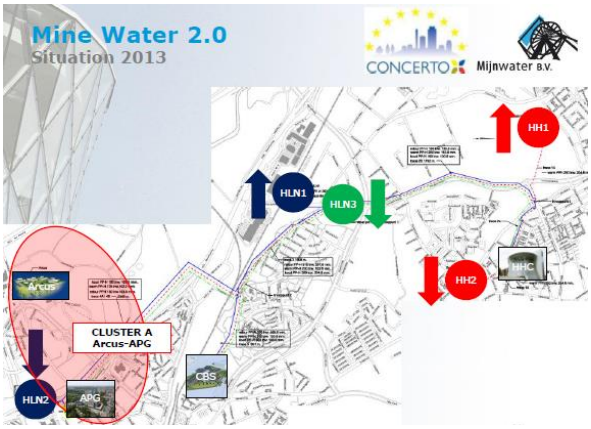

Figure 8. Status of the Mine Water 2.0 project as in realization at this moment

Two new connections will be realized in 2013:

- Existing retrofitted low-ex building of APG (32.000 m^2) in April;
- Newly constructed low-ex building Arcus College (30.000 m^2) in October.

APG is a pension fund that owns a data center. A heat pump will provide the cooling of the datacenter and heating of the building. The waste heat of 15.000 GJ per year will be provided to the new cluster network A for heat exchange in the cluster and other buildings connected to the mine water backbone. APG will show a total CO_2 reduction of 118% compared to the existing situation, extraordinary for a building of 1974.

The newly constructed Arcus College has heat pumps to provide the base load of heating and cooling. A total CO_2 reduction 45% is reached compared to traditional heating and cooling with natural gas boilers and electrical chillers.

The existing connections CBS and HHC will in the near future become part of the clusters B and C which are in development. Until than they dispose the used mine water to HLN3. Small intermediate provisions will be made to integrate them in the Mine Water 2.0 system.

3.2 Poly generation

We further acknowledge that the capacity of the mine water system is finite. For realizing the goals of the Sustainable Structure Plan of Heerlen a combination of mine water with other renewable energy sources such as biomass and/or solar energy and waste heat is necessary. The mine water structure (back-bone and cluster networks) is the vehicle to provide these energy sources to buildings, or in other words: Mine Water 2.0 is/will become a hybrid energy structure, a true smart grid for heating and cooling.

A lot of initiatives are already in picture or in progress e.g. a bio-CHP, a closed greenhouse and waste heat of an additional datacenter. All these energy sources are locally situated and will be connected to the nearest cluster gird to supply their heat, cold and/or electricity to the corresponding cluster and through the mine water backbone to other clusters. Cluster D for example will become a self-supporting cluster by heat exchange between a metal foundry and a swimming pool.

Besides these options other poly generation possibilities are in view like cooling towers for peak cold demands.

3.3 Maximizing hydraulic and thermal capacity mine water system

Limitations in the mine water system can occur on three levels:

- Temperature, flow and storage capacity of the mine water reservoirs;
- Flow of the mine water wells;
- Flow and grid capacity of the mine water backbone.

At this moment the hydraulic capacity is limited by the mine water backbone, especially the hot mine water pipe. In the near future the return pipe HLN3 will no longer be needed and can be used for supply and disposal of additional hot mine water to enlarge the hydraulic mine water capacity.

With the current mine water backbone a maximum supply capacity of 180 m3/h hot mine water and 280 m^3/h of cold mine water can be reached. Additional thermal capacity will be gained because the hot mine water will be cooled down by ≥ 12 °K instead of by 10 °K and the cold water will be heated up by more than 12 °K instead of by 6 °K currently.

By raising the temperature of the hot mine water by means of poly generation, the thermal capacity of the mine water back-bone can be increased even more.

Also the hydraulic capacity of the mine water backbone can be raised by the installation of additional pipes or the replacement of pipes with a larger diameter. The next limitation that than will occur is the capacity of the wells. A distinction should be made between the extraction and infiltration capacity of the wells. The infiltration capacity is much higher than the extraction capacity because during infiltration static pressure is released, while during extraction static pressure has to be overcome. For extraction the dimensions of the casing of the well is determinative. For injection the choice and operation of the injection valve is most determinative.

The hot well HH1 and cold well HLN1 are intended as single acting wells. The hot well HH2 and cold well HLN2 are intended as bidirectional wells. In the first phase of the Mine Water 2.0 project which is realized now HH2 and HLN2 are executed only as injection wells.

The hot wells HH1 en HH2 have a maximum extraction capacity of 120 m^3/h each. The cold wells HLN1 and HLN2 have a maximum extraction capacity of 230 m^3/h each. The injection capacity of HH2 en HLN2 are depending on the selection of the infiltration valves a factor two larger.

In the first phase of the Mine Water 2.0 project that is realized now the following measures are taken to maximize the hydraulic capacity of the current mine water backbone:

- Replacing the well pumps of the extraction hot well HH1 (120 m^3/h instead of 50 m^3/h) and cold well HLN1 (230 m^3/h instead of 80 m^3/h);
- Pressure booster systems at the extraction wells HH1 and HLN1 to improve distribution pressure to max 12 bar;
- Reuse of the existing mine water return pipe for additional supply and disposal of hot mine water to and from the hot mine water reservoir (near future). A connection between the existing hot and return mine water pipe is made;
- Closed cluster grid A for the new connections (Arcus and APG) with circulation pumps at each building for energy exchange between the buildings in the cluster and the mine water backbone;
- Booster pumps for energy exchange between the mine water backbone and the cluster grid A and transportation to:
  - Another cluster (future) for energy exchange;
  - The existing connections CBS and HHC for energy supply;
  - The injection wells for underground energy storage in mine water reservoirs;

- Application of sophisticated injections valves at the hot injection well HH2 and cold injection well HLN2.

3.4 Fully automatic and demand driven

The Mine water system 2.0 is fully automatic and demand driven with 3 levels of control as shown in figure 9.

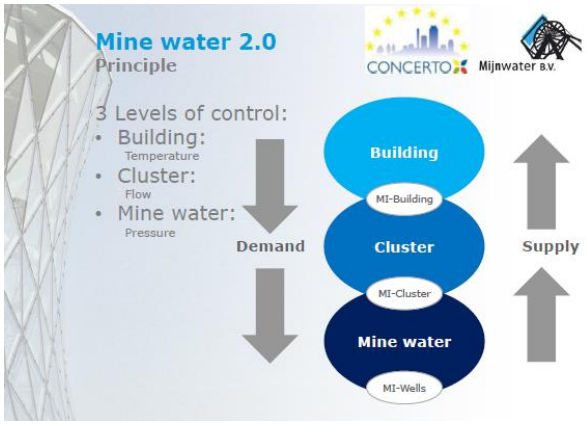

Figure 9. Visualization of the three levels of control.

All buildings (first level) are connected to a cluster network (second level). Several clusters are connected to the mine water backbone and reservoirs (third level). At each level (building, cluster, mine water) there is a net heat or cold demand. The buildings determine the demand of the cluster. The cluster provides what the buildings demand. The clusters determine the demand of the mine water backbone. The mine water backbone and mine water wells provides what the clusters demand. Exchange at the interface between the levels takes place with autonomous substations (MI = Mine water Installation). Each level works with another process control parameter:

- MI-Building: Temperature;
- MI-Cluster: Flow;
- MI-Wells: Pressure.

A simple principle which demands innovative practical solutions. How it works see chapter 4.

4. HOW IT WORKS

Figure 10 shows an animation of the Mine Water 2.0 in 3-D perspective.

The three levels of control are distinguishable:

- MI-Building;
- MI-Cluster;
- MI-Wells (HH1, HH2, HLN1 & HLN2).

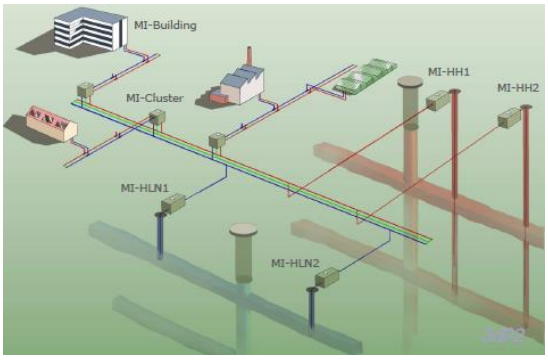

Figure 10. Animation Mine Water 2.0 in 3-D perspective.

4.1 MI-Building

Figures 11 and 12 show the principle and isometric chart of the MI-Building which provides heat and cold to the HVAC installation of the building.

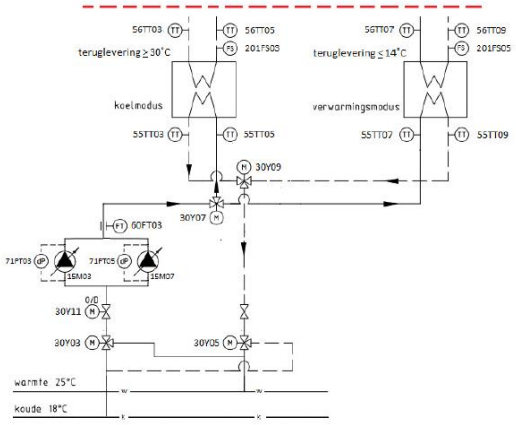

Figure 11. Principle of the MI-Building

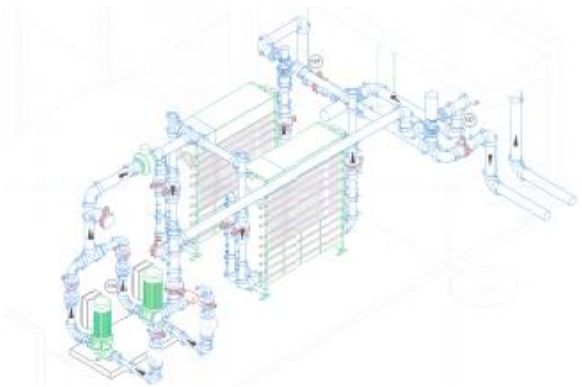

Figure 12. Isometric chart of the MI-Building

Frequency controlled pumps and 3-way valves provide hot or cold water from the cluster network to the heat exchanger for heating and cooling.

Modern building HVAC installations are designed in such a way that heat and cold can be supplied at the same time (for example heat demand at the north façade and cold demand at the south façade). With a

heat pump it is possible to reuse the exacted heat during cooling for heating instantly.

Hot and cold storage tanks are needed for process control and can also be used for heat and cold storage for a longer period. For example in mid-season the cold that is generated by the heat pumps in the morning period during heating up the building can be used for cooling the building in the afternoon or vice versa. However there will always be a net heat or cold demand which is supplied by the cluster network. ***The capacity of the heat exchanger of the mine water installation is controlled on temperature.*** This can be the outlet temperature on the primary (cluster) or secondary (building) side depending on requirements of the HVAC system of the building.

The mine water (heat exchanger) installation works fully autonomously with selected signal exchange between the mine water installation and the HVAC control system of the building. This is an important requirement for separation of the operational responsibilities between the mine water and building installation. We need to be sure to locate failures at the exact place. For this purpose we also measure the temperatures at the secondary (building) side of the heat exchanger.

For energy exchange within the cluster and also for disposal of heat and cold to the mine water reservoirs it is very important that the return temperatures to the cluster grid meet the requirements of the hot and cold mine water reservoir. This is > 29˚C for hot return flows during cooling and < 15˚C for cold return flows during heating. For this purpose it is necessary that the building installation provides a sufficiently high > 30˚C (cooling) or low temperature < 14˚C (heating) at the heat exchanger on the secondary (building) side, whether passive or active (heat pump) generated. In order to provide high efficiency operation of the heat pumps the heat exchangers are designed with a very small temperature difference between the primary and secondary side of 1˚K. Modern heat pumps supplied with heat from the mine water can achieve a COP of 5 up to 7 depending on the required heating or cooling temperatures of the building.

4.2 MI-Cluster

Figures 13 and 14 show the principle and 3-D animation of the mine water installation of the newly constructed cluster A.

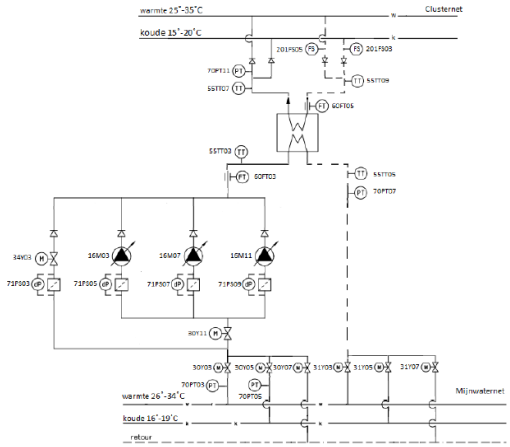



Figure 13 and 14. Principle and 3-D animation of the mine water installation of the cluster.

In the MI-Cluster heat and cold is exchanged between the cluster grid and the mine water backbone. MI-Cluster is located in the field in an underground basement. To reduce costs a standardized precast concrete basement and a prefabricated installation on skid are used. The skid is hoisted in the basement before the concrete lid is placed. The MI-Cluster A is placed in the biggest standard precast concrete basement available in the Netherlands, LXBXH=11x4x2.6m. Figures 15, 16 and 17 show the implementation of this action on the 9th of February 2013.



Figure 15, 16 and 17. The MI-Cluster A is put into his position.

The design of the MI-Cluster was a challenge. Besides the placement underground it must be compact to limit the size of the basement. Therefor a smart design was needed:

1. No pumps were foreseen on the cluster grid side. The circulation pumps of the MI-Buildings take care of this flow;
2. An ingenious system of non-return valves on the cluster side ensures that the cluster water (hot or cold) enters the heat exchanger always in the same flow direction. Double acting flow meters and automatic valves are unessential. Two flow switches detect whether heating or cooling mode is needed;
3. The heat exchangers (two with an option for a third one) are double acting for heat and cold supply;
4. The booster pumps (three with an option for a fourth one) at the mine water side are double acting for heat and cold supply;
5. Valves at the mine water side take care of the right flow direction (heating or cooling) in such a way that the mine water (hot or cold) enters the heat exchangers always from the same direction.

In the cluster grid the MI-Buildings exchange heat and cold first. The net heat or cold flow goes to the heat exchanger of the MI-Cluster. Flow switches detect whether heating or cooling is needed. When heating is needed the booster pumps on the mine water site of the MI-Cluster extract mine water from the hot mine water pipe. The cold return mine water is then supplied to the cold mine water pipe of the mine water backbone. For cooling the operation is vice versa. ***The booster pumps are controlled by flow.*** The flow on the mine water side needs to be the same as the net flow on the cluster side of the heat exchanger for optimum heat and cold exchange. Therefore both flows are measured.

Another function of the booster pumps is to push the used return mine water in the opposite mine water pipe for transportation to:

- Another cluster (in future) for energy exchange;
- The existing connections CBS and HHC for energy supply;
- The injection wells for energy storage.

The booster pumps can be seen as an additional pressurization system to enlarge the hydraulic capacity of the mine water backbone.

4.3 MI-Wells

As shown in the geographic charts (figure 6 and 8) there are two extraction wells (hot HH1; cold HLN1) and two injection wells (hot HH2; cold HLN2). The injection wells will be made applicable for bi-directional flows in the near future.

4.3.1 Extraction wells HH1 en HLN1

The extraction wells HH1 en HLN1 supply hot and cold mine water and ensure a sufficient supply pressure of minimum 2 bar at the clusters grid and the direct to the mine water backbone attached buildings (CBS and HHC) to prevent degassing of the mine water. Therefore the supply pressures are measured and transmitted through a fast internet connection to the mine water installations of the extraction wells. ***So the extraction wells are controlled by pressure.***

The figures 18 and 19 show the principle and setup of the mine water installation of the extraction well HLN1.

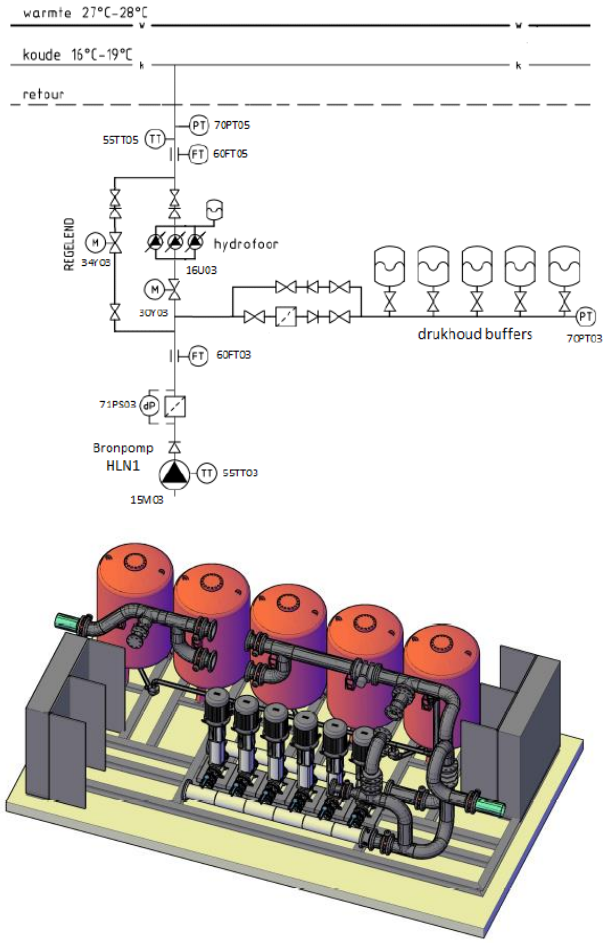

Figure 18 and 19. Principle and setup of the mine water installation of the extraction well HLN1

The functionality of the extraction well can be spilt up in two parts. First the well pump which brings the mine water from about 120 m deep to the surface and deliver it with a pressure head of 3 bar to a pressure boosting system.

The pressure boosting system puts the mine water under pressure of maximum 12 bar for distribution to the mine water installations of the different clusters (at the moment only cluster A) and the direct to the mine water backbone attached buildings (CBS and HHC). Because the system needs to operate full automatically and demand driven between 0% and 100% a pressure buffer system is installed to prevent the well pump from commute. At the hot extraction well HH1 (min 30 m^3/h; max 120 m^3/h) 3 buffer tanks of 2 m^3 are installed and at the cold extraction well (min 40 m^3/h; max 230 m^3/h) 5 buffer tanks of 2 m^3.

The mine water installation of the extraction wells are also prefabricated on skids and installed in a standardized precast concrete basement. The figures 20, 21 and 22 show the construction of mine water installation at the extraction well HH1.



Figure 20, 21 and 22. The MI-HH1 put into position.

4.3.2 Infiltration well HH2 and HLN2

The infiltration wells HH2 and HLN2 fulfil two functions:

1. Injection of the surplus of the hot and cold mine water in the subsequent mine water reservoir with a minimal injection pressure of 2 bar to prevent degassing;
2. Achieve energy exchange through the mine water backbone between clusters and the (current) direct to the mine water back bone attached buildings (CBS and HHC).

By means of algorithm per injection well it can be determined whether there is a surplus of heat and cold. With the measured extracted flows at the mine water backbone this can be defined.

HH2 (hot injection well)

Flow = ∑ cold demand flow clusters – hot demand flow CBS – hot demand flow HHC.

HLN2 (cold injection well)

Flow = ∑ hot demand flow clusters – cold demand flow CBS – cold demand flow HHC.

If the result of this calculation is ≤ 0 the injection well should be out of order. If the result of this calculation is > 0 the injection well should be acting.

If there is a demand of heat or cold at a cluster than the cluster produces a cold or heat mine water flow to be available for supply to other clusters and the existing connections CBS and HHC. The existing connections inject their used mine water for the time being still in HLN3. This return flow is not available for energy exchange and will not be delivered to the hot or cold injection well HH2 and HLN2.

Pressurization during energy exchange
With the minimum injection pressure of 2 bar it can occur that the return mine water of a cluster, which can be used for energy exchange elsewhere, prefers to flow directly to the injection well in operation.

In that situation a higher injection pressure is needed so the return mine water of the cluster flows preferably into the opposite direction. Calculations show that the needed operational pressure at the injection wells can rise up to 6 bar.

The mine water system sets high quality standards to the injection valves to fulfil the above mentioned requirements:

1. High material quality. The mine water is corrosive, AISI316 is a prerequisite.
2. Large depth. To prevent degassing the injection of the mine water needs to take place at a depth of 120 m below surface, about 30 m below water level.
3. Large reach of the flow capacity. The injection valves must handle a flow from 0 to 230 m^3/h.
4. Remote adjustable injection pressure form 2 to 6 bar.
5. Appropriate for bidirectional use in future. During the extraction of the mine water by a well pump the valve must be fully opened with a minimum of pressure loss.
6. Completely lockable in case of operation of the opposite injection well.
7. Pressure resistant. At a depth of 120 m below surface level and a maximum operation pressure of 6 bar at the surface a pressure of 18 bar may occur at the injection valve. If the injection valve is fully closed the pressure can even rise to 24 bar.

Market research lead us to the Claval company from Switserland. They developed valves for fuel disposal by airplanes into valves for ATES-systems. These valves meet our specifications very well.

In figure 23 and 24 the principle of the operation of the injection wells is given. Also the mock-up of the injection valve at Technology Trading, the Dutch representative of Claval is shown (figure 25).

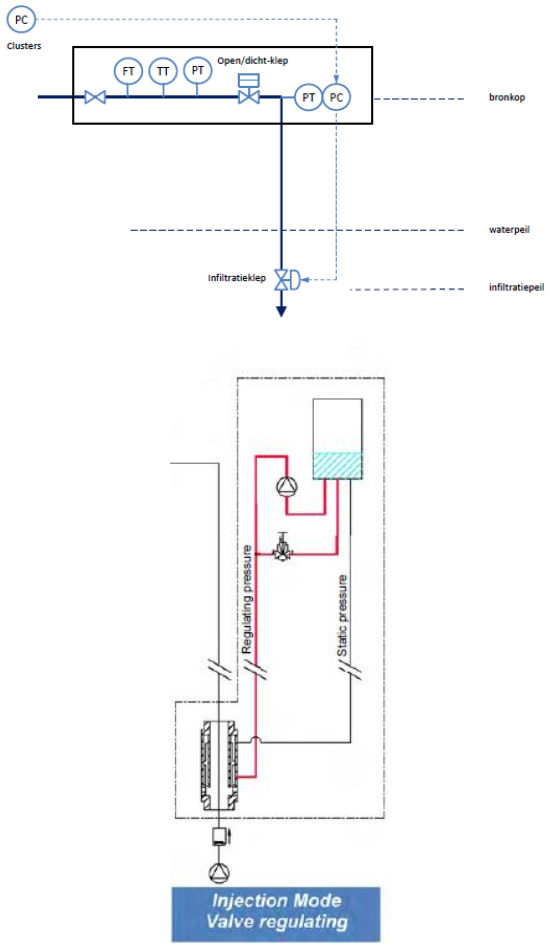

Figure 23 and 24. Principle of the operation of the injection wells

The valves are equipped with an independent hydraulic (oil) pressure control system with a simple control box so that the valves even at a great depth can be controlled with a remote-adjustable injection pressure.

The valves are resistant to 18 bar. Because 24 bar can occur a second valve at ground level is provided in the well which completely closes when the injection well is not in operation.



Figure 25. Mock-up of the injection valve at Technology Trading

4.4 CENTRAL MONITORING SYSTEM (CMS)

All mine water installations (MI-Building, MI-Cluster, MI-Well) are equipped with sophisticated process control units which communicate directly through the internet with each other and with the Central Monitoring and Control System (CMS) for monitoring of these geographically dispersed substations. A rather new application in the building environment. The scheme below (Figure 26) shows the structure of the system.

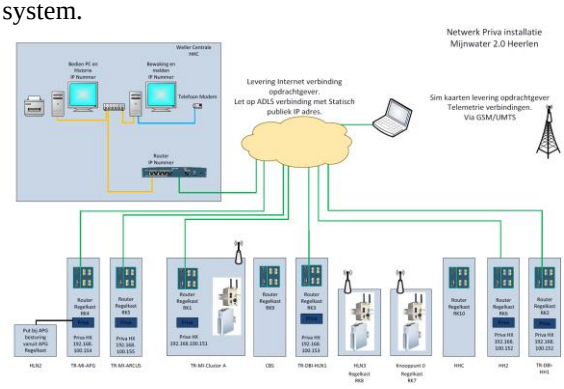

Figure 26. Structure of the Central Monitoring System

The process control units (DDC) of each substation work autonomous so that they can still operate if the internet connection is temporary not available. The signal exchange for process control purposes between these subsystems is limited to minimal actions necessary and takes place directly to have no undue delay.

The CMS is the central control room from which all substations are approached, visualized and monitored. From the CMS all settings can be adjusted in the substations. All substations together form one virtual control installation.

The CMS consists of two subsystems:

- Operation and history;
- Monitoring and transmission of alarm signals to relevant service companies.

The CMS is arranged according to a client-server configuration. For service purposes can be remotely logged into the CMS.

5. SOUND BUSINESS CASE FOR MINE WATER 2.0

European Interreg 3B NWE programme and the 6th Framework Program project EC REMINING-lowex (Redevelopment of European Mining Areas into Sustainable Communities by Integrating Supply and Demand Side based on Low Exergy Principles) are the main subsidies and funding for the Mine Water 1.0.

With these subsidies the municipality of Heerlen was able to cover the main risks and extra work for the drilling to the stone drifts and the start-up of the pilot projects Heerlerheide Centrum and CBS. With these pilot project a lot of experience is gained about the financial exploitation

The experience is the basis for developing a Mine Water Corporation that can offer commercial offers to interest building owners for connecting to the cluster grid. The building owner pays a standing charge for the mine water connection and normally runs his own heat pump installation. This charge is based on the capital and operational costs of the Mine Water Corporation for the mine water installation and connection to the cluster grid.

For optimal energy exchange and further development of the hybrid sustainable energy structure another even more interesting energy exploitation option is that the Mine Water Corporation becomes the owner of the boiler house (heat pump included). In this case the Mine Water Corporation sells heat and cold to the building owners. The fees for the heat and cold supply are based on the avoided costs by using gas boilers, electrical chillers and avoided additional measures for meeting the strict municipality energy performance regulations of Heerlen (50% lower than the national legislation). Because the mine water installation is more energy efficient the additional physical building properties have to be less heavy, but still higher that the national requirements.

This leads to a more interesting business case for the Mine Water Corporation and at the same time the building owners who also don't have to worry anymore about the efficient operation of the boiler house and the requirements of the mine water connection. This becomes the responsibility of the Mine Water Corporation who has more degrees of freedom in order to fill in the energy supply and exploitation in combination with other collective sustainable energy production plants connected to the Mine Water 2.0 smart grid for heating and cooling. Because the Mine Water Corporation also owns the heat pump installation she has the position of buying centralized electricity for all the owned boiler houses and she can also benefit from PV-panels on the roofs of the buildings.

At this time the Mine Water Corporation makes a bid based on the two different options mentioned above. In all cases the commercial offer of the Mine Water Corporation should be competitive to persuade potential customers to join the Mine Water 2.0 system. By doing so the Mine Water Corporation may be of interest for private shareholders to continue this business.

6. CONCLUSIONS

- The Mine water project in Heerlen is now being upgraded from the straight forward pilot system to a smart grid in heating and cooling with full scale hybrid sustainable energy structure called Mine Water 2.0. We provide with 4 new connections in 2013 - 2014. In 2015 in total 500.000 m^2 floor area will be provided with mine water, which has a CO_2 emission reduction of 65% on heating and cooling for these connections.
- The Mine Water 2.0 project demands smart cost effective solutions. No rocket science but creative thinking and new use of standard available solutions. A challenge for the involved education institutions in Heerlen like the Zuyd University of Applied Sciences and the new found NEBER institute for applied research on New Energy, Built Environment and Renewables.
- Cluster grids are a profound solution to provide energy exchange between buildings.
- By poly generation the power of the application of cluster grids and capacity of the mine water grid can be strongly increased.
- Cluster grid applications are used in combination with low temperature geothermal sources (mine water) but can be applied in general with other sustainable heat and cold energy sources e.g. waste heat from data centres and closed greenhouses.
- Further technical development will be necessary to develop fine tuning in cost effective design and operation of the grid installations (MI-Wells; MI-Cluster and MI-Buildings).
- The Mine Water Corporation developing Mine Water 2.0 proves that heat pump operation with low-ex heat sources can be commercial feasible.
- Because its economic feasibility the Mine Water 2.0 system can and will become an essential part of the Sustainable Energy Structure Plan of Heerlen witch reaches out towards 2040.

ACKNOWLEDGEMENT

We thank the EC 6th Framework and AgentschapNL for their financial support and for their trust in our ideas and work during the realization this new energy exchange concept.

REFERENCES:

Swart, D (July 2006). *End of Well Reports Heerlerheide #1 & Heerlerheide #2*. Groningen, the Netherlands. PGMi

Van Tongeren P.C.H., Amann – Hildenbrand, A & Daneels A. (April 2007). *The Selection of 'low' and 'intermediate' temperature wells (HRL-1, -2 & -3) at the Heerlen mine water-project*. Mol, Belgium. VITO NV

Watzlaf G.R. & Ackman E.T. (2006). *Underground Mine Water for Heating and Cooling using Geothermal Heat Pump Systems.* Pittsburgh USA. IMWA Springer-Verlag

Laenen, B, Harcouet-Menou V, & De Boever, E. *Proposal pump test HLN2 – HLN3* Vito Mol (BE) February 24 2012

Laenen, B, Harcouet-Menou V, & De Boever, E. *Evaluation impact of various supply scenarios on the mine water reservoirs*, Vito Mol (BE)march 2013

Laenen, B, Amann – Hildenbrand, A & Van Tongeren, P.C.H. (June 2007). *The Heerlen mine water-project: Evaluation of the pump-test data of July 2006 at the Heerlerheide-1 & -2 wells*. Mol, Belgium. VITO NV

Willems, E & Jablonska, B *Energy neutral building key to energy neutral districts*, WREC 2011 Linkoping (2011)

Vidrih, B Medved, S Vetršek, & J Roijen, E *Standardized solutions for low exergy mine water systems configurations including solutions for high quality energy demand* Technical Guidebook Work package 2, Concerto Initiative, EC 6th Framework (2011)