Proceedings World Geothermal Congress 2005
Antalya, Turkey, 24-29 April 2005

# Hydraulic Conceptual Model for a Pumping Project Field Management Plan in Berlin Geothermal Field, El Salvador

Juan Carlos Ábrego Castillo, José Luis Chavarría, José Luis Henríquez

15 Av. Sur, Col. Utila, Santa Tecla, El Salvador Central América

jcabrego@lageo.com.sv, lchavarria@lageo.com.sv , jlhenriquez@lageo.com.sv

**Keywords:** brine, pressure, flow, pipe diameter, hydraulic conceptual model.

## ABSTRACT

A pump trial project has been completed, testing injection of produced brine at elevated pressure in a tight injection well TR-8A in Berlin Geothermal Field, El Salvador, with the purpose of improving the capacity of a defined injection zone of the field while ensuring uninterrupted power generation.

On average, a total of approximately 350 lt/s of produced brine are injected via two pipeline networks which include separators at various elevations under gravity feed owing to an approximately 150 m lower elevation than the production zone. The two pipeline networks, the high pressure system (HPS), and the low pressure system (LPS), run 9 bar apart.

To ensure uninterrupted injection capability that in turn ensures uninterrupted power generation, the two pipeline systems were connected via an "interconnector". (Figure 2)

To verify the base data calculated for a proposed field management plan (Chavarría, 2003), it was used commercially available software (Plant-Flow) for the operation of the two interconnected pipeline systems during the trial injection at elevated pressure with Hazen William's equations for steady state flow analysis.

The plan considered to shut-in 4 of the 12 injection wells connected to the 2 pipeline networks to allow for full flexibility in the water supply for the high pressure injection.

The calculation suggested that at the interconnection of the two pipeline networks, the low pressure one would not be flooded provided the differential pressures ranged between 0 to 17 bar according with the flow pumped into TR8A reinjection well, while ensuring that the suction pressure would not reach its critical value.

With this plan, the operation program was developed and as a result, the suction pressure of the centrifugal pumps was by and large maintained in the range of values between 15 and 23 barg while providing the full range of required injection rates into TR-8A from 25 to 130 lt/s.

No discharges at lower elevation producer platforms were reported neither were there any uncontrolled discharges during normal pumping operation that lasted at peak rates uninterrupted for up to 2 weeks.

Injection at elevated pressures routinely of up to 80 – 110 bar proved to be a viable alternative to drilling of dedicated injection wells operating under gravity feed.

## 1. INTRODUCTION

The Berlin Geothermal Field is located in the eastern part of El Salvador on the slope of the Berlin-Tecapa Volcano, and is one of two geothermal fields under commercial operation in El Salvador, currently producing at full capacity of 60 MW.

Operation of the Berlin Geothermal Field is constrained by the injection capacity of produced geothermal brine. To run at full capacity a few production wells are currently utilized as injection wells.

In order to improve the capacity of a defined injection zone of the field, a pump trial project was completed with injection of produced brine into well TR8A.

The reinjection system in Berlin has two gravity reinjection systems; one of them, the high pressure system with six reinjection wells, is fed with brine from separation platforms TR4, TR5 at 770 and 845 m.a.s.l respectively, with a separation pressure of 10.9 barg. The total amount of brine coming from these two platforms is about 260 lt/s at 180º C. The total length of pipe is about 6.2 km ranging from 10" to 20" nominal diameter.

The low pressure reinjection system with six reinjection wells, is fed with brine from platforms TR2/TR9 that has a separation unit at TR9 at the elevation of 650 m.a.s.l., and separation pressure of 10.5 barg. The amount of brine coming from this separation unit is about 90 lt/s at 180º C. The total length of pipe is about 3.14 km ranging from 3" to 12" nominal diameter.

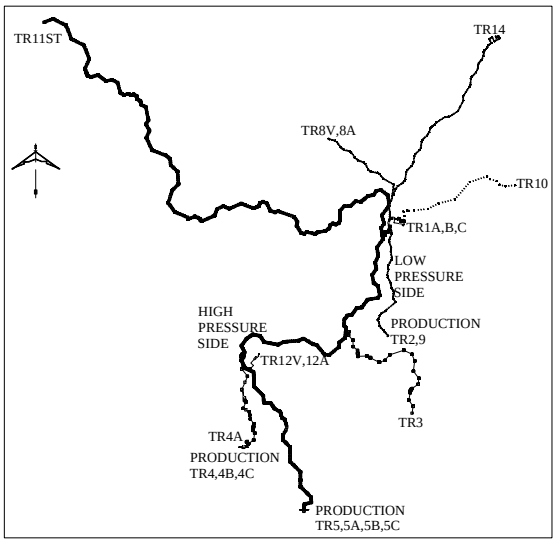


**Figure 1. Berlin geothermal production and reinjection well distribution.**

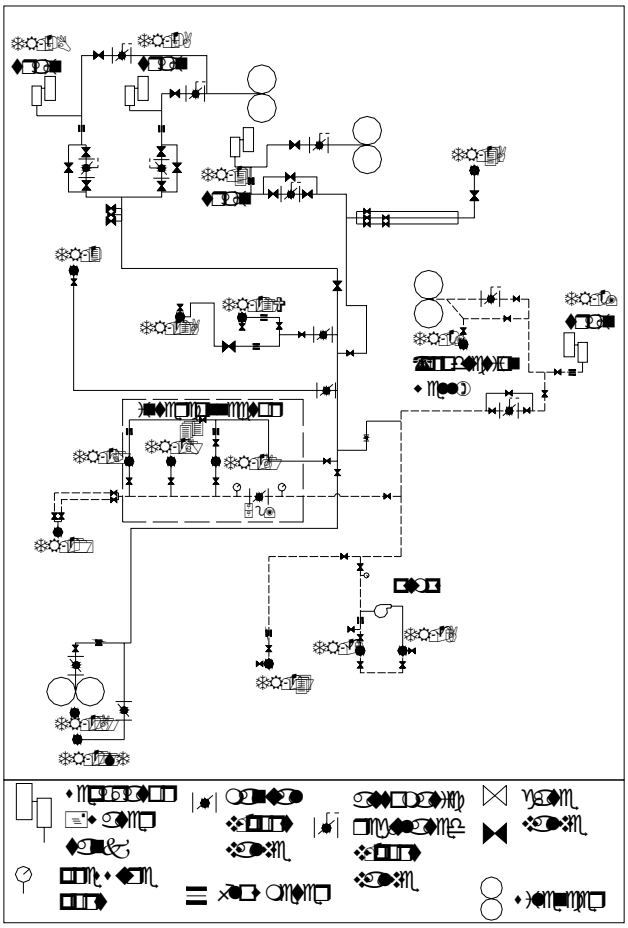

**Figure 2. Squematic diagram of Berlin geothermal high and low pressure reinjection system distribution (Chavarría, 2003).**

The elevation for each of the reinjection wells is shown in Table 1.

**Table 1. Production and reinjection platform elevations in meters above sea level.**

| | Production | | | Reinjection | | | | | | | | | | | |
|---|---|---|---|---|---|---|---|---|---|---|---|---|---|---|---|
| Platforms | TR2/9 | TR4 | TR5 | TR3 | TR4 | TR14 | TR12A | TR12 | TR11ST | TR8V | TR8A | TR1A | TR1B | TR1C | TR10 |
| m.a.s.l. | 650 | 770 | 845 | 760 | 770 | 457 | 675 | 675 | 445 | 467 | 467 | 575 | 575 | 575 | 537 |

## 2. PUMPING REQUIREMENTS

The reinjection pumping program in TR8A required the flow as shown in Table 2.

**Table 2. Well TR8A injection program.**

| Flow into TR8A | Period of time |
|---|---|
| 22 lt/s | 2 days |
| 30 lt/s | 2 days |
| 50 lt/s | 2 days |
| 70 lt/s | 2 days |
| 90 lt/s | 2 days |
| 110 lt/s | Until required |
| 130 lt/s | If Required |
| 150 lt/s | If Required |

Platform TR-1 was calculated to be the interconnection site that will allow the high pressure system brine be utilized in the low pressure system to meet the flow requirements.

Two multi-stage centrifugal pumps were located near a custom-built injection wellhead of TR-8A which had an operations envelope defined by: (i) suction pressure not lower than 15 barg; (ii) working temperature of brine about 180 ° C and (iii) total injection rate ranging from 25 to 130 lt/s.

A field management plan was proposed based on calculations using commercially available software "Engineer Equation Solver (EES)".

A second approach was carried on with the commercially available software "Plant Flow" in order to confirm the data base calculated for the plan proposed.

## 3. CONCEPTUAL MODEL

### 3.1 Constraints

- Discharges at the low- pressure separation system due to over floods when using interconnector.
- Water contamination at separation platforms that could risk the power plant electric generation with interconnector in use.
- Brine surface discharges that could not be managed with the power station brine disposal system.
- Pump suction pressure not lower than 15 barg.
- Emergency response plans to operate the field when there was an emergency shut down due to operational or technical reasons and protect both the pumps and the power generation facilities.
- Functional conditions of the existing pipeline network facilities for possible water hammers.
- Some well monitoring requirements that implied to have them out of reinjection.

### 3.2 Well reinjection curves.

The well reinjection curves were considered as straight lines using points measured in the field and starting from point 0 lt/s at 0.0 barg. The slopes obtained were introduced in the conceptual model.

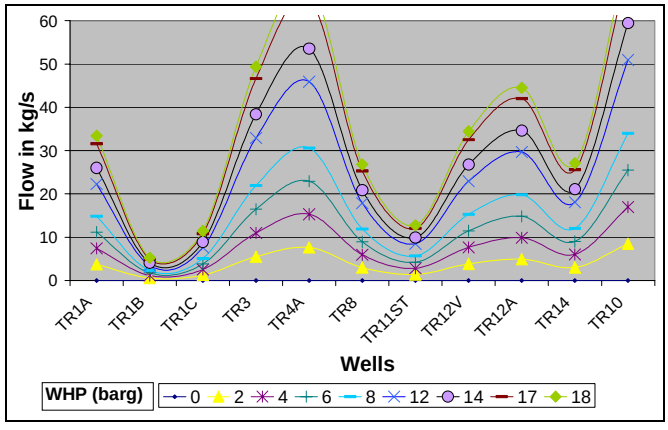


**Figure 3. Berlin geothermal well reinjection curves.**

### 3.3 Brine Level

The two-phase calculations were not taken into consideration for this approach, and it is certain that a more accurate conceptual model will have to include it.

Even though Plant Flow works with the complete geometry of the pipeline facility, the length was modified according with the brine level, the two-phase length of pipe was not considered in the analysis.

### 3.4 Boundaries:

- The interconnection pressures as a key control point to manage flows. (Valve No. 59 according with Figure 2).
- The brine level in the low-pressure separation unit gave a maximum suction pressure of about 25 bar-g at platform TR8A in order to prevent any discharge of brine to the atmosphere and possible contamination of steam.
- Suction pressure of pumps, located at platform TR8, was not allowed to be lower than 15 barg.
- Flow into well TR4A was assumed to be constant, independent from any variation in the brine level at high-pressure reinjection system.
- The calculations did not take into consideration heat loses, all was considered to be adiabatic process. A confirmation of this was the temperature registered at platform TR8 that was 178º C.
- All calculations were for steady state conditions with Hazen Williams's equations. No water hammers effects added due to sudden stops of the pumps.
- Well reinjection curves as matching data.

## 4. PLANT FLOW SOFTWARE

### 4.1 Methodology

The consideration of 1 kg/s equals to 1 lt/s was done in order to avoid mistakes applying unit conversion factors.

The steps are as follows:

1. Introduction of all geometric data for the brine reinjection pipeline network.
2. Introduction of the sizes of pipelines.
3. Input of the sources and sinks, location of the production and reinjection wells.
4. Input of boundary conditions such as well flows and well head pressures. This same step defined at the same time the variables to be calculated in one iteration.
5. Selection of brine levels for both pressure reinjection systems.
6. For opened interconnection, a pressure drop value was given.
7. The analysis was carried on.
8. With the results calculated for the unknown data, comparison between the pressures and flows for each well and their reinjection curves were done and if a significant difference resulted, other combination of brine level and pressure losses at interconnection had to be introduced until a match were achieved.

At the end, the same procedure was followed for each case of flow into TR8A and a set of values obtained.

With the basement calculations of well head reinjection pressures and flows into them, the program proposed could be confirmed and for the Plant Flow database, the plan is shown in Table 3.

Where:

$Q_p$: Flow into TR8A reinjection well

$Q_{int}$: Flow in the interconnector

$P_s$: Pump suction pressure

$\Delta P_{int:}$ Pressure difference at interconnector.

**Table 3. Plan proposed for the field during pumping operation.**

| case | $Q_p$ [lt/s] | $P_s$ [bar] | $Q_{int}$ [lt/s] | $\Delta P_{int}$ [bar] | Well shut | Comments |
|---|---|---|---|---|---|---|
| 1 | 22 | 21.4 | 0 | 28.4<br>11.5 | TR-8 | Start of pumping test operations |
| 2 | 30 | 20.5 | 0 | 28.4<br>11.5 | TR-8, TR-1B | Pressure monitoring on TR-1B |
| 3 | 50 (day1) | 23 | 0 | 28.4<br>14.2 | TR-8, TR-1B, TR-1C, TR-10 | No flow from Low pressure system to TR1 site |
| 4 | 50 (day2) | 23 | 0 | 25.9<br>14.1 | TR-8, TR-1B | Flow from H.P.S to TR-10 and TR-1C |
| 5 | 70 (day3) | 24.1 | 18 | 23.13<br>15.1 | TR-8, TR-1B | Open Interconnection between H.P.S and L.P.S High pressure system and |
| 6 | 70 (day4) | 23.7 | 25 | 26.5 15 | TR-8, TR-1B, TR-1A | Start pressure monitoring on TR-1A |
| 7 | 90 | 24.2 | 40 | 23.8<br>14.1 | TR-8, TR-1B, TR-1A | |
| 8 | 110 | 24.1 | 65 | 18.6 16 | TR-8, TR-1B, TR-1A | Undefined period |
| 9 | 130 | 22.7 | 80 | 14.8<br>14.8 | TR-8 / TR-1B, TR-1A | If required |
| 10 | 150 | 19 | 101 | 11.5<br>11.5 | TR-8, TR-1B, TR-1A, TR-10 | If Required |

### 4.2 Example of approach.

Case No.4 considered flow into TR8A of 50 lt/s, and wells TR8, TR1B closed.

The well production and reinjection input data for Plant Flow software was as in Table 4.

**Table 4. List of values given for sources and sinks for case No.4 with 50 lt/s at well TR-8A.**

| CONTROL POINT LIST | | | |
|---|---|---|---|
| POINT NAME | CONTROL TYPE | PRESSURE (bar a ) | CONSUMPTION (kg/s ) |
| TR5 | Inlet | 11.9 | ? |
| TR11 | Outlet | ? | 25 |
| TR1C | Outlet | ? | 15.86 |
| TR1A | Outlet | ? | 46 |
| TR1B | Zero Cons. | ? | none |
| TR8 | Zero Cons. | ? | none |
| TR2/TR9 | Inlet | 11.5 | 86 |
| TR14 | Outlet | ? | ? |
| TR4 | Inlet | 11.5 | ? |
| TR3 | Outlet | ? | 23 |
| TR12 | Outlet | ? | 28 |
| R12A | Outlet | ? | 36 |
| TR8A | Outlet | ? | 50 |
| TR10 | Outlet | ? | 27.5 |
| TR4A | Outlet | ? | 44 |

The water levels were as shown in Table 5.

**Table 5. Water levels assumed for the high and low pressure reinjection systems for Case No.4 with an injection of 50 lt/s into TR-8A well.**

| Well No. | m.a.s.l. |
|---|---|
| TR4 | 739.95 |
| TR5 | 735.77 |
| TR2/TR9 | 608.49 |

No value of pressure drop at the interconnection was introduced because the interconnection was not needed for this scenario.

The results of the calculation are shown in Table 6.

**Table 6. Calculated set of values for well head pressures and flows using Plant Flow Software for case No.4.**

| Case4 Well # | WHP Bar a | Flow lt/s |
|---|---|---|
| TR2/9 | 12 | 86 |
| TR4 | 12 | 78 |
| TR5 | 12 | 167 |
| TR3 | 9 | 23 |
| TR4A | 12 | 44 |
| TR14 | 24 | 36 |
| TR12A | 16 | 36 |
| TR12 | 16 | 28 |
| TR11ST | 37 | 25 |
| TR8V | 23 | 0 |
| TR8A | 23 | 50 |
| TR1A | 26 | 46 |
| TR1B | 14 | 0 |
| TR1C | 26 | 16 |
| TR10 | 7 | 28 |

This same procedure was followed for all the cases from 1 to 10 and the results obtained with the software are shown in Table 7.

**Table 7. Calculated well head pressure and flow values for the different pumping flows into TR8A well.**

| | | PRODUCTION | | | REINYECTION WELLS | | | | | | | | | | | |
|---|---|---|---|---|---|---|---|---|---|---|---|---|---|---|---|---|
| case | Well # | TR2/9 | TR4 | TR5 | TR3 | TR4 | TR14 | TR12A | TR12 | TR11ST | TR8V | TR8A | TR1A | TR1B | TR1C | TR10 |
| 0 | bar a | 12 | 11.5 | 11.9 | 11.4 | 10.2 | 27.5 | 17.8 | 17.8 | 38.9 | 26.5 | 26.4 | 28.0 | 17.5 | 17.4 | 8.3 |
| | lt/s | 86 | 88 | 148 | 30 | 44 | 40 | 45 | 36 | 28 | 0 | 0 | 53 | 4 | 11 | 31 |
| 1 | bar a | | | | 11.4 | 10.2 | 22.5 | 17.9 | 17.9 | 39.2 | 21.4 | 21.4 | 28.2 | 12.3 | 12.2 | 7.4 |
| | lt/s | 86 | 90 | 146 | 30 | 44 | 30.6 | 45 | 36 | 28 | 0 | 22 | 53 | 3.3 | 7.1 | 25 |
| 2 | bar a | | | | 11.7 | 10.2 | 21.6 | 18.2 | 18.2 | 39.5 | 20.6 | 20.5 | 28.5 | 11.6 | 11.5 | 8.3 |
| | lt/s | 86 | 73 | 162 | 30 | 44 | 32.3 | 45 | 35 | 28 | 0 | 30 | 53 | 0 | 6.7 | 17 |
| 3 | bar a | | | | 11.7 | 10.2 | 24.2 | 18.2 | 18.2 | 39.5 | 23.2 | 23.1 | 28.4 | 14.3 | 14.2 | 17.1 |
| | lt/s | 86 | 74 | 163 | 29.4 | 44 | 36 | 45 | 35 | 28 | 0 | 50 | 55.5 | 0 | 0 | 0 |
| 4 | bar a | | | | 9.3 | 10.2 | 24.2 | 15.9 | 15.9 | 37.1 | 23.2 | 23.1 | 25.9 | 14.3 | 25.7 | 7.4 |
| | lt/s | 86 | 78 | 167 | 23 | 44 | 36 | 36 | 28 | 25 | 0 | 50 | 46 | 0 | 15.9 | 27.5 |
| 5 | bar a | | | | 7.1 | 10.2 | 25.3 | 13.6 | 13.6 | 34.8 | 24.2 | 24.1 | 23.7 | 23.6 | 23.5 | 7.4 |
| | lt/s | 86 | 75 | 162 | 14 | 44 | 34.9 | 31 | 24.0 | 22.8 | 0 | 70 | 42 | 0 | 13.8 | 30 |
| 6 | bar a | | | | 10.6 | 10.2 | 24.9 | 17.2 | 17.2 | 38.4 | 23.8 | 23.7 | 27.3 | 27.2 | 27.2 | 8.3 |
| | lt/s | 86 | 70 | 166 | 26 | 44 | 41.1 | 40 | 32 | 26 | 0 | 70 | 0.0 | 0.0 | 16 | 27.7 |
| 7 | bar a | | | | 9.0 | 10.2 | 25.6 | 15.5 | 15.5 | 36.7 | 24.3 | 24.2 | 25.5 | 25.4 | 25.3 | 6.9 |
| | lt/s | 86 | 84 | 155 | 21 | 44 | 38.9 | 35 | 27 | 26 | 0 | 90 | 0 | 0 | 16 | 27.4 |
| 8 | bar a | | | | 6.3 | 10.2 | 25.7 | 12.9 | 12.9 | 34.0 | 24.2 | 24.1 | 22.8 | 22.5 | 22.6 | 7.2 |
| | lt/s | 86 | 88 | 148 | 14.0 | 44 | 41.1 | 29 | 22 | 24 | 0 | 110 | 0 | 0 | 13 | 25.2 |
| 9 | bar a | | | | 4.8 | 10.2 | 24.5 | 11.3 | 11.3 | 32.4 | 22.8 | 22.7 | 21.1 | 20.8 | 20.9 | 6.3 |
| | lt/s | 86 | 81 | 160 | 10.3 | 44 | 36.5 | 26.2 | 20.3 | 22.9 | 0 | 130.0 | 0 | 0 | 12.7 | 24.6 |
| 10 | bar a | | | | 4.8 | 10.2 | 21.1 | 11.3 | 11.3 | 32.4 | 19.1 | 19 | 21.1 | 20.8 | 20.9 | 23.7 |
| | lt/s | 86 | 81 | 156 | 10.3 | 44 | 36.8 | 26.2 | 20.3 | 22.9 | 0 | 150 | 0 | 0 | 12.7 | 0.0 |

The analysis developed and implemented an operational emergency response plan for various flow rates to protect both the pumps and the power generation facilities in case of emergency shutdowns for operational or technical reasons.

## 5. RESULTS FROM THE FIELD MEASUREMENTS

At the field, in order to minimize the valve time operation, according with Figure 2, the interconnnection valve was selected to be valve No. 43 instead of valve No. 59, introducing changes in the reinjection well configuration for flow and pressures.

Wells TR-1B, TR-1C and TR10, turned to be always in the low pressure side, contrary to what was assumed.

Selection of valve No. 43 was expected to bring differences in the values of pressure in both high and low pressure pipeline reinjection systems for the same steps of flow required according with Table 2.

The high pressure reinjection side was expected to have higher well head pressures while the low pressure side smaller well head pressure values.

After the pumping operation, some of the well measurements, the ones representative for each pressure reinjection system are shown in Table 8.

**Table 8. Measured well head pressures TR1A, TR14 reinjection wells during pumping operation.**

| Year 2003 Month: July Day | TR8A lt/s | TR1A WHP bar a | TR14 WHP bar a | Pump Suction Presure (bar a) | Observation |
|---|---|---|---|---|---|
| 1 | 35 | 27.7 | 20.8 | 20 | 3.75 hr. Operation |
| 2 | 35 | 27.5 | 20.8 | 20 | |
| 3 | 50 | 27.7 | 20.8 | 19.22 | |
| 4 | 35 | 27.6 | 20.8 | 19.8 | ShutDown |
| 5 | 35 | 27.6 | 20.8 | | ShutDown |
| 6 | 35 | 27.6 | 20.6 | 19.5 | 2.8 hr. Operation |
| 7 | 75 | 27.6 | 20.6 | 19.7 | |
| 8 | 75 | 25.1 | 22.8 | 21.23 | |
| 9 | 95 | 25.1 | 22.8 | 21.8 | |
| 10 | 120 | | 22.6 | 21.28 | |
| 11 | 120 | 27.3 | 19.3 | | Shutdown |
| 12 | 0 | 27.3 | 19.3 | | Shutdown |
| 13 | 0 | 27.3 | 19.7 | | Shutdown |
| 14 | 75 | 27.3 | 19.7 | | Operation Re-started |
| 15 | 120 | | 23.9 | 22.7 | TR-1A Shut |
| 16 | 128 | | 21.8 | 20.7 | |

## 6. RESULTS

- Since there was a change in the interconnector valve, Valve No. 43 instead of valve 59 (Figure 2), correspondence between the Conceptual Model and the measurements only happened when there was no flow in the interconnector.

- The pressure differences for the high and low pressure reinjection systems are shown in Table 9, where DP EES and DP PF are outputs for Engineering Equation Solver and Plant Flow respectively.

- TR-1A well head pressure in the high pressure reinjection side, experimented a difference ranging from 0.7 bar to 1.8 bar while TR-14 well head pressure in the low pressure reinjection side, experimented a pressure difference ranging from -1.1 bar to -4.7 bar between the measured and estimated values with the Conceptual Model Calculations. These differences were affected by the change of interconnector valve in TR-1 reinjection platform with the shift of three reinjection wells from the high to the low pressure side.

- From estimations with the Conceptual Model: Pressures at interconnection in the high side (TR1A) showed that with all the well configurations, the brine level was not going to reach the elevation of the separation equipments and overflow them. The water level in the high pressure reinjection side ranged from 682 m.a.s.l to 767 m.a.s.l.

- With the Conceptual Model estimations: Pressures at the low pressure reinjection system showed that with all the well configuration, the brine level was not going to reach the elevation of the separation equipments and cause brine discharges to atmosphere and steam contamination. They also confirmed that the pump suction pressure was not going to be lower than 15 barg.

**Table 9. Comparison between pressure differences at interconnector between measured data and Plant Flow and EES software outputs.**

| Flow lt/s | DP EES | DP PF | Measured DP | DP Variation EES and Measured | DP Variation PF and Measured | DP Variation PF and EES |
|---|---|---|---|---|---|---|
| 35 | 16.6 | 16.9 | 17.1 | 3% | 1% | 2% |
| 35 | 16.6 | 16.9 | 16.9 | 2% | 0% | 2% |
| 50 | 15.6 | 14.2 | 17.9 | 13% | 21% | -10% |
| 35 | 16.6 | 16.9 | 17.2 | 3% | 2% | 2% |
| 35 | 16.6 | 16.9 | 17.5 | 5% | 3% | 2% |
| 75 | 6.9 | 11.5 | 17.3 | 60% | 34% | 40% |
| 75 | 6.9 | 11.5 | 13.3 | 48% | 13% | 40% |
| 95 | 5 | 9.7 | 12.7 | 61% | 24% | 48% |

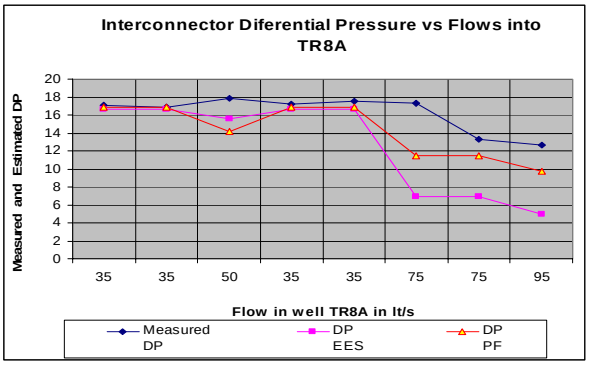


**Figure 4. Comparison between the pressure difference measured and estimated at interconnector for various flows into well TR8-A**

## 7. CONCLUSIONS

Based on the results, it was concluded that:

- With the field management plan as a guide, the operation program was developed and as a result of it, the suction pressure of the centrifugal pumps was by and large maintained in the range of values between 15 and 23 barg while providing the full range of required injection rates into TR-8A from 25 to 130 lt/s.

- No discharges at lower elevation producer platforms were reported neither were there any uncontrolled discharges during normal pumping operation, which lasted at peak, rates uninterrupted for up to 2 weeks.

- During emergency shutdowns the emergency response plan proved to control the suction pressure of the pumps while avoiding any disruption to the power generation and uncontrolled discharge to atmosphere. Injection at elevated pressures routinely of up to 80 – 110 bar proved to be a viable alternative to drilling of dedicated injection wells operating under gravity feed.

## REFERENCES

Chavarría, J.L., Paz, J., Àbrego, J.C.: Geothermal Fluid Supply Plan during Hydraulic Stimulation in well TR8A, *Internal Plan*, Well TR8A Stimulation Project, La Geo S.A de C.V., El Salvador (2002).