Proceedings World Geothermal Congress 2005
Antalya, Turkey, 24-29 April 2005

Geothermal Steam Economic H_2S Abatement and Sulphur Recovery

Wayne D. Monnery

Xergy Processing Inc., Calgary, Alberta, Canada

monneryw@xergy.ca

Keywords: H_2S abatement

ABSTRACT

A serious problem that occurs in geothermal steam power projects is the emission of hydrogen sulfide. This problem is not easily rectifiable and as a result, the geothermal steam industry has a need for H_2S abatement technology that is suitable and economic for use in geothermal steam facilities. Current technology has proven to have high capital and/or operating costs and some processes are difficult to operate.

In answer to the requirement for new technology and for companies to be environmentally responsible, Xergy Processing Inc. has developed a gas phase direct oxidation process for treating H_2S in the range of 0.1 to 20 t/d which has several applications. The process is ideally suited for H_2S abatement in geothermal power processes. The process has low capital and operating costs, and is easy to operate utilizing equipment that is familiar to industry.

1. INTRODUCTION

The treatment of sour gases (primarily hydrocarbons with varying significant quantities of H_2S and CO_2) and acid gases (primarily containing H_2S, CO_2, water and minor amounts of other components) has been done in the petroleum industry for decades. In geothermal power projects, the analogy for acid gas is non-condensable gas (NCG) consisting primarily of CO_2, water, varying amounts of H_2S and minor amounts of other compounds such as N_2.

The amount of H_2S to be removed depends on local environmental regulations, which are quite stringent in North America and Europe but are starting to evolve in Pacific Rim countries.

1.1 Existing H_2S Abatement Technology

In the petroleum industry, current typical technologies for treating sour gas and acid gas are:

- Amine Sweetening/Acid Gas Injection
- Amine Sweetening/Sulphur Recovery (including Modified Claus, Selectox)
- Liquid Redox Processes (Lo-Cat, Sulphurox, Stretford)
- Non-Regenerable Scavengers (Liquid, Solid)

The choice of technology usually requires study of the individual case but in general scavengers are not used when the H_2S quantity is above about 100 – 200 kg/d due to the high operating cost associated with replacement and disposal of the non-regenerable chemical.

1.2 New H_2S Abatement Technology

In the geothermal industry, most of the same technology as the petroleum industry has been considered as well as limestone-gypsum technology. Unfortunately, existing technology has shown to have relatively high capital and operating costs and often produces byproducts (waste streams) and poor quality products that are difficult and expensive to dispose of (Nagl, 2003; Takahashi and Kuragaki, 2000).

As a result, there is a need for a technology with lower capital and operating costs that produces a saleable quality sulphur product without waste streams. In answer to this, newer technologies have been and are being developed. Some of these new technologies are based on complicated liquid phase chemistry and still have relatively high capital and operating costs (Monnery and Nikiforuk, 2003).

2. XERGY'S NEW TECHNOLOGY

Unlike other technologies, the Xergy ACT (Advanced Catalytic Technology) is a dry gas phase direct oxidation of H_2S to elemental sulphur and water. The process reaction is based on many years of research by Tollefson et al. (1985, 1988, 1992, 1993, 1998) at the University of Calgary, Canada. Xergy has two versions of the process, sub sulphur dew point and above sulphur dew point. A detailed flow schematic of the sub dew point process is shown in Figure 1 and the above dew point process in Figure 2. The sub dew point process operates much the same as a sub dew point modified Claus process tail gas clean up or dry desiccant water/hydrocarbon dew point type process with cyclic operation, meaning that it is familiar to field operations personnel. The above dew point process operates like a converter in the modified Claus process.

The process gas is heated to reaction temperature, after which air is added just before the mixture enters the fixed bed catalytic reactor. In the reactor, the oxidation of H_2S takes place according to:

$$H_2S + 1/2\ O_2 \rightarrow S + H_2O \quad (1)$$

An unwanted side reaction that can take place is the formation of SO_2 according to:

$$H_2S + 3/2\ O_2 \rightarrow SO_2 + H_2O \quad (2)$$

The Claus reaction also occurs:

$$2H_2S + SO_2 \leftrightarrow (3/x)S + 2H_2O \quad (3)$$

Research has shown that there is a high selectivity to sulphur via reaction (1) with appropriate catalyst and as

long as temperature and oxygen remain within certain limits. In addition, as the results of equilibrium calculations verify, the Claus reaction also proceeds to the right and the conversion and selectivity increase with pressure as discussed below.

In the sub dew point process, the elemental sulphur formed is absorbed into the catalyst and builds up until the reactor is full. At this time, the reactor is switched to regeneration cycle while the other reactor that has been on regeneration cycle is switched to reaction cycle. Treated gas simply leaves the process. Regeneration gas is a slipstream from the front end of the process and sulphur is removed from the reactor on regeneration cycle by adding heat to desorb and vapourize it. The sulphur is then recovered by condensation in a condenser. The vapour from the condenser is recycled back to the front end of the process, downstream of the splitter valve, much like a wet gas regeneration in a solid desiccant water dew point process.

In the above dew point process, the sulphur is not adsorbed into the catalyst and stays in the vapour phase. The sulphur is then simply recovered in the condenser. As such, this process requires is simpler and less expensive but conversions are lower than the sub dew point process.

The sub dew point process can be applied from atmospheric pressure to over 7000 kPag or 1000 psig. For the first generation catalyst, conversion and selectivity improve with pressure as shown below in Table 1. For the second generation catalyst, the low pressure conversions are 97% to sulphur with 1.6% to SO_2, resulting in a selectivity of 98.4%. These conversion to sulphur and selectivity values then increase with pressure such that conversion to sulphur should reach 99.9+% at a pressure of about 700 kPag or 100 psig.

Table 1 – H_2S ACT Conversion vs Pressure

Pressure (psig)	H_2S Conversion (%)	SO_2 Conversion (%)	S Conversion (%)
10	91.0	5.0	86.0
200	99.9	2.4	97.5
300	99.9	1.0	98.9
800	>99.9	0.1	99.8

The above dew point process is only operated at pressures less than 350 kPag or 50 psig, with the allowable pressure depending on the inlet H_2S concentration and corresponding sulphur dew point. The conversion to sulphur is typically about 85%.

Xergy is the only company that has a sub sulphur dew point direct oxidation process. As discussed above, this version of the process can achieve over 95% conversion in a single stage where other technologies take two or three stages. The high single stage conversion is achievable because reaction thermodynamics are favourable below the sulphur dew point.

Direct oxidation is exothermic and can be applied up to a H_2S concentration of about 5%. Similar to the Selectox technology, with recycle the Xergy process is applicable up to about 35% H_2S. It is important to note that not only can the Xergy process be use to treat acid gases, but can also directly treat raw gas.

Although the Xergy schematics are detailed, they show that in the Xergy processes there are less major pieces of equipment than competitive processes and that the equipment is familiar to industry. As can be seen from Figure 1, the sub dew point process is very simple with Figure 2 showing the above dew point process even simpler. In addition, the material of construction is carbon steel, much like a Claus plant. For applications where high H_2S removal and sulphur recovery beyond 98% are required, a second stage is added for additional recovery and to ensure there is no carryover of elemental sulphur. The second stage can be sub dew point reactor/adsorption type or a physical solvent type. Oxygen carryover is also avoided. In this case the process is virtually a “zero emission” process and no amine unit is required. As a result, the Xergy ACT process is a “fit for purpose” technology which amounts to lower capital costs when less recovery is required.

As a product, the Xergy ACT process produces Claus quality (bright yellow) molten sulphur. The handling of this product fits into world wide infrastructure and is easy to sell or dispose of and there are no waste streams.

Major control variables are air ratio, reaction gas temperature, regeneration gas temperature and rate. Of these, the latter three are set during design and initially adjusted during operation, after which they are constant. As such, the only continuously adjusted variable is the air ratio.

Ultimately, the Xergy process is a simple one with correspondingly low capital cost and is easy to operate. In addition, the utility requirements are relatively low resulting in a correspondingly low operating cost. The process produces a product that can be sold instead of just disposed of. Depending on the actual H_2S removal or sulphur recovery requirements at various locations worldwide, the Xergy process can be tailored to needs making it “fit for Purpose”. These attributes make it an ideal process for H_2S abatement in geothermal steam projects.

3. COMPARISON TO OTHER H_2S ABATEMENT TECHNOLOGIES

The Xergy ACT process capital and operating costs have been compared with other technologies for a petroleum industry gas processing application. This comparison clearly shows the advantages of this process.

In 1997, the Gas Research Institute (GRI), now known as the Gas Technology Institute (GTI), undertook a study and produced the report “Technical and Economic Evaluation for Small-Scale Hydrogen Sulfide Removal from Natural Gas”. This study compared sweetening and sulphur recovery to liquid redox processes. Later in 1997, GTI produced the report “Evaluation of Selected Emerging Sulphur Recovery Processes” which also compared the Crystasulf and Shell-Paques/Thiopaq processes. All processes had to meet at leaset 99.5% H_2S removal or sulphur recovery. Based on the methodology of these two studies and other literature in the public domain, this paper compares the capital and operating costs of the processes. Table 2 below compares the capital costs and Table 3 compares the operating costs for one of the GTI base cases.

As can be seen in Table 2, which does not include license fees, the Xergy ACT process has the lowest capital cost with the Crystasulf process about 32% higher and the Shell-Paques/Thiopaq process about double. Table 3 compares the operating costs for one of the GTI base cases including fuel gas, electricity, catalyst and chemicals but not process water make-up.

Table 2 - GRI High Pressure Application (10 MMscfd, Onshore, 0.5% H_2S, 2.0% CO_2, 1000 psia)

Process	Capital Cost $US / 1000 (Mid 2000)
Amine/LOCAT[1]	3920
Amine/LOCAT II[1]	3765
LOCAT[1]	4610
LOCAT II[1]	2585
Sulferox[1]	2842
CrystaSulf Direct (60-80% of Amine/LOCAT II)[2]	2636
Thiopaques (110% of Amine/LOCAT II)[3]	4141
Xergy Direct Oxidation c/w Tail Gas Clean Up[4]	1987

Notes:

1. "Technical and Economic Evaluation for Small-Scale Hydrogen Sulfide Removal from Natural Gas", GRI Report, November 1997; Indexed from Mid-1989 to Mid-2000.

2. "Evaluation of Selected Emerging Sulphur Recovery Processes", GRI, 1997; "CRYSTASULF Process For Recovering Sulphur From Gas Streams", Rueter et al., 2000; "Comparison of Technologies For Removing Sulphur From High pressure Sour Natural Gas With Sulphur Throughputs Between 0.1 and 30 Long Tons/Day", McIntush et al., 2001.

3. "Evaluation of Selected Emerging Sulphur Recovery Processes" , GRI, 1997

4. Solvent Tail Gas Clean Up system cost estimated as amine unit.

As can be seen in Table 3, the Xergy ACT process has the lowest operating cost with the Shell-Paques/Thiopaq process about 70% higher and the Crystasulf process just over double.

Table 3 - GRI High Pressure Application – Molten Sulphur (10 MMscfd, Onshore, 0.5% H_2S, 2.0% CO_2, 1000 psia)

Process	Chemical/Utility Cost $US / LT
LOCAT/Sulferox[1]	369 - 724
CrystaSulf Direct[2]	295
Thiopaques[3]	213 - 338
Xergy Direct Oxidation c/w Tail Gas Clean Up[4]	125 - 148

Notes:

1. "Comparison of Technologies For Removing Sulphur From High pressure Sour Natural Gas With Sulphur Throughputs Between 0.1 and 30 Long Tons/Day", McIntush et al., 2001.

2. "Results of Pilot Testing for The CRYSTASULF Process", McIntush et al., 2000; "Evaluation of Selected Emerging Sulphur Recovery Processes" , GRI, 1997

3. "Evaluation of Selected Emerging Sulphur Recovery Processes" , GRI, 1997; quote for 5 MMscfd, 3.0 LT/D unit – non molten.

4. Lower values for when condenser heat duty credits plant utility system.

Although these comparisons are for a petroleum natural gas case, they clearly show the economic advantages of the Xergy process.

The Xergy ACT process has also been compared in a geothermal case study for H_2S abatement of a NCG. The case study is based on a project in the Philippines with the following data:

Table 4 – Geothermal Case Study

Parameter	Units	Value
NCG Gas Flow	10^3 m^3/d	41.0
Inlet H_2S	%	12.4
Inlet Sulphur	tonne/d	6.89
Temperature	°C	40 - 120
Pressure	bara	1.0
Req'd Sulphur Recovery	%	> 98

As shown in Table 4, this case is a relatively challenging one with the NCG having a high H_2S concentration. Note that the case study has been based on achieving greater than 98% recovery of saleable quality sulphur. This means that the Lo-Cat option in the comparison requires a melter. In addition, for meeting H_2S emission requirements, the cost of a catalytic oxidizer has been added to the Selectox and Xergy oprtions.

The capital costs, shown in Table 5 below, are in Canadian dollars, 2002. The operating costs, shown in Table 6 below, include natural gas for process heating, electrical power and catalyst/chemicals. The operating costs are based on a natural gas price of $4.50 and an electricity cost of $0.05/kW-hr. Although fuel may not be available and the heat required by the processes may need to be electrically generated, both operating costs would change so that the relative positions would be the same.

As shown in Table 5, the Xergy ACT process is considerably lower in capital cost than the competitive processes.

Table 5 – Geothermal Case Study Capital Costs

Process	Capital Cost ($ CDN)
Selectox + 3 Claus Stages	4.5 million
Lo-Cat	5.6 million
Xergy 2 – Stage	2.5 million

Notes:

1. Selectox cost from Hydrocarbon Processing, May 2002 and Wichert and Royan (1996).

2. Lo-Cat Cost from Nagl (2001) data x 1.5 skid factor + melter.

As shown in Table 6, the Xergy ACT process operating costs, although not the lowest, are very competitive.

Table 6 – Geothermal Case Study Operating Costs

Process	Operating Cost ($/tonne CDN)
Selectox + 3 Claus Stages	53
Lo-Cat	280 – 490
Xergy 2 – Stage	80

Notes:

1. Heat required does not include jacketing for sulphur piping and storage since it would be common to all three processes.

2. Xergy and Selectox catalyst are assumed to have a three year life.

3. Selectox heat costs are based on heating from 50 °C to 177 °C, electrical costs were taken to be the same as Xergy and catalyst costs were estimated based on proprietary cost data.

4. Lo-Cat costs are based on Nagl (2001, 2003) and a conversion factor of 1.4 between $CDN and $US.

However, if the concentration of H_2S is reduced to 3.1%, the operating costs of the Xergy ACT process become 7.7% lower than the Selectox process, $130/tonne versus $140/tonne. Note that these costs increase, reflecting economy of scale. For the Lo-Cat process Nagl (2003) does not state the basis for his operating cost ($0.20 - $0.25/kg US) such that economy of scale cannot be determined but Nagl (2001) states that operating costs are $0.30/kg - $0.35/kg US. So costs may be considered to range from $0.20/kg to $0.35/kg US.

5. OPERATION OF THE XERGY PROTOTYPE COMMERCIAL SRU

The first Xergy ACT plant has been installed in a petroleum application at a sour gas processing plant operated by Altagas Services Inc. It is located at Bantry, SE of Calgary, Alberta along the Trans Canada Highway. Altagas needed to expand the plant on behalf of gas producers in the area; however, the problem for them was that the sulphur emissions to flare were already close to the Energy and Utilities Board (EUB) allowable limit of 1 tonne/d for total sulphur. In order for Altagas to expand their facility to allow for processing of additional gas volumes, the amount of flared sulphur had to be maintained or reduced from the allowable limit. Xergy negotiated and signed an agreement with Altagas that allowed Xergy, at its own cost and risk, to fabricate and install a pilot plant downstream of the amine sweetening system at the Bantry facility. The purpose of the sulphur recovery unit (SRU) was to convert 70% or more of the sulphur contained in the acid gas as H_2S to elemental sulphur. The sulphur produced had to be of sales grade quality in order for it to be sold or delivered into the existing sulphur handling facilities and markets in the province.

The engineering design of the prototype was done in May – June 2001. The design basis is summarized in the following table.

Table 7 - Altagas Bantry Xergy ACT Process Design Basis

Parameter	Original Design Value
Flow (MMscfd)	0.50
H_2S / CO_2 (% dry)	3.0 / 97.0
Equivalent Sulphur (t/d)	0.57
Sulphur Conversion (%)	86

In an effort to provide flexibility for AltaGas, Xergy designed the reactors and condenser to accommodate a flow rate of 28.26 10^3 m^3/d resulting in an equivalent sulphur capacity of 1.1 t/d for this equipment.

The fabrication of the unit was started in July, 2001 and upon completion in October, 2001 the skid mounted plant

was transported to the Bantry sour gas plant. The small footprint ACT skid was installed, catalyst was loaded and the unit was commissioned in November, 2001.

Several processing trials were run from December 2001 to June, 2002 until the control system was reliable and consistent. This time period was due to the AltaGas plant recovering from a fire as well as some amine unit operating problems. In June 2002 the unit was started full time and ran consistently and reliably until January 2003, with less than 1% downtime and minimal operator attention required. During this time the H_2S concentration averaged 5.6%, much higher than design resulting in the SRU running much hotter than design. Even so, the sulphur conversion with first generation catalyst averaged 80.0% based on results from performance tests done by Sulphur Experts. Based on very good performance of the sub dew point system, AltaGas purchased the unit from Xergy.

In January 2003, AltaGas made the decision to change out the first generation catalyst. Altagas was also required to decrease the CO_2 in their sales gas, which would result in a substantial increase in acid gas to be processed by the SRU as shown in Table 8, and correspondingly the H_2S concentration would decrease to 3 – 4%.

Table 8 - Altagas Bantry Xergy ACT Process 2003 Conditions

Parameter	2003 Conditions
Flow (MMscfd)	0.9 – 1.0
H_2S / CO_2 (% dry)	2.0 – 4.0 / 95.0 – 98.0
Equivalent Sulphur (t/d)	0.75 – 1.5
Sulphur Conversion (%)	70 – 75

The increased flow of acid gas would result in a hydraulic bottleneck in the ACT process so an acid gas blower was added by AltaGas in February 2003. To accommodate the substantial additional capacity required, Xergy recommended running above dew point, modifying some of the piping and adding a higher capacity heater, all of which were also completed by AltaGas between March and May, 2003. However, the acid gas blower installed by AltaGas upstream of the SRU was of vane variety with flooded lubrication and not an oil-free blower as recommended by Xergy.

Consequently, since the expansion in the first quarter of 2003 the conversion to sulphur has been lower than expected. Xergy, in conjunction with AltaGas spent considerable time and effort to improve the SRU performance. Finally, in early September Xergy was able to isolate the principle cause of the lower than expected performance of the AltaGas SRU. The catalyst has been contaminated by carryover of lube oil from the vane type acid gas blower. The contamination has been confirmed by field gas chromatograph tests on the SRU inlet acid gas as well as catalyst compositional analysis by Alberta Sulphur Research from field samples taken in July 2003.

Xergy provided AltaGas a set of recommendations in October 2003 to get their unit back to optimum performance. Since the discovery of the contamination, AltaGas has continued to run the SRU. The conversion has dropped further and the sulphur produced is now a tan color, indicative of hydrocarbon contamination. AltaGas plans to implement the recommendations by the end of 2004.

6. AWARD OF XERGY COMMERCIAL SRU

After thorough due diligence comparing different processes, in April 2004 Encana Corporation awarded Xergy a contract to provide a sulphur recovery unit at its Foster Creek Steam Assisted Gravity Drainage (SAGD) oil recovery project. Xergy's process will allow companies such as Encana to meet EUB requirements for SAGD projects that are commonly used to develop Alberta's vast oil reserves. During production of heavy oil from SAGD operations, off gas is produced. This produced sour gas is then consumed on site as fuel for steam generation and may result in exceeding the limits allowable for sulphur emissions and shorten boiler tube life.

In contrast to the prototype unit treating acid gas from a sweetening unit at 35 kPag, this application treats a sour gas at 350 kPag. Although the required sulphur recovery is only 70%, the Xergy ACT process will provide 95% recovery of bright yellow sulphur in a single stage, with no waste streams. With innovative solutions, this SRU will have the only pressurized sulphur storage known to us, enabling a very small process footprint.

This project is currently in the detailed design phase.

7. IMPROVEMENTS THROUGH RESEARCH

Xergy has been doing research at Alberta Sulphur Research (ASR) on new generation catalysts. Our second generation catalyst is much improved over the original formulation in sub dew point operation, as shown in Figure 3.

Xergy uses the lab to do specific application tests, as well as basic research. Xergy is testing the second generation catalyst in different conditions including tail gas clean up operation (similar to NCG gas applications), for resistance to contamination and in above dew point operation. Xergy is also testing the new generation catalyst at elevated pressures along with second stage options to ensure no carryover of any kind for high pressure applications where the ACT process can take the place of both a sweetening unit and sulphur recovery in one process.

8. CONCLUSIONS

- Xergy Processing Inc. has developed a new direct oxidation process for converting H_2S to elemental sulphur that can be use in a variety of applications.
- The process is environmentally responsible with no waste streams.
- The process has low capital and operating costs relative to competing H_2S removal processes, produces saleable quality sulphur without waste streams and is easy to operate. Depending on the configuration and

conditions, the process can convert from 80% to over 99.9% of the H_2S.

- The process is typically skid mounted with a small footprint.
- As pointed out by Takahashi and Kuragaki (2000), a process with these attributes is ideally suited for H_2S abatement in geothermal steam projects.

REFERENCES

Dalai, A.K., A. Majumdar and E. L. Tollefson: Kinetics of Hydrogen Sulfide Oxidation Over an Activated Carbon Catalyst in the Pressure Range of 712-3463kPa and Temperature Range of 110-240 °C. *Proceedings of the 12th Symposium on Catalysis Progress in Catalysis*, May 25-28, 1992, Banff, Alberta, Canada,.

Dalai, A.K., A. Majumdar, A. Chowdhury and E. L. Tollefson: The Effects of Pressure and Temperature on the Catalytic Oxidation of Hydrogen Sulfide in Natural Gas and Regeneration of the Catalyst to Recover the Sulphur Produced, *The Canadian Journal of Chemical Engineering*, V.71, February, 1993, p.75-82.

Ghosh, T. K. and E. L. Tollefson: Catalytic Oxidation of Low Concentrations of Hydrogen Sulfide, *Proceedings*, Canadian Gas Processors Association, Calgary, Alberta, March 14, 1985, 22 pages.

GRI: *Report*, Evaluation of Selected Emerging Sulphur Recovery Processes, 1997.

McIntush, K., C. Rueter and K. DeBerry: Comparison of Technologies For Removing Sulphur From High Pressure Sour Natural Gas With Sulphur Throughputs Between 0.1 and 30 Long Tons/Day, *Proceedings*, 80 Annual GPA Convention, 2001.

McIntush, K., B. Petrinec and C.A. Beitler: Results of Pilot Testing the Crystasulf Process, *Proceedings*, 2000 Laurence Reid Gas Conditioning Conference, Norman, Oklahoma, USA.

Monnery, W. and Nikiforuk, C: Economic Sulphur Recovery in 0.1 to 20 t/d Range, *Proceedings*, Sulpur 2003, Banff, Alberta, Canada.

Nagl, G.: Removing Hydrogen Sulfide, *Hydrocarbon Engineering*, V6, N2, 2001.

Nagl, G.: Controlling H_2S Emissions in Geothermal Power Plants, *Proceedings*, European Geothermal Conference 2003, Budapest, Hungary.

Quinlan, M. and L. Echterhoff:, Technical and Economic Evaluation for Small-Scale Hydrogen Sulfide Removal from Natural Gas, *Report*, GRI 97/0394, November 1997.

Royan, T. and E. Wichert: Options for Small Scale Sulphur Recovery, *Proceedings*, SPE paper 35609, Gas Technology Conference Conference, Calgary, Alberta, Canada, April 26 – May 1, 1996.

Rueter, C., K. DeBerry, K. McIntush and D. Dalrymple: Crystasulf Process For Recovering Sulphur from Gas Streams, *Proceedings*, North Texas Gas Processors Association Meeting, April 2000, Irving, Texas, USA.

Takahashi, K. and Kuragaki, M.: Yanaizu-Nishiyama Geothermal Power Station H_2S Abatement System, *Proceedings*, World Geothermal Steam Congress 2000, Kyushu, Japan.

Tollefson E.L. and A. Chowdhury: Oxidation of Low Concentrations of Hydrogen Sulfide in Natural Gas Over an Activated Carbon Catalyst, *Proceedings*, 9th International Congress on Catalysis, June 28, 1988.

Yang, Aimin, E. L. Tollefson and A. K. Dalai: Oxidation of Low Concentrations of Hydrogen Sulfide:Process Optimization and Kinetic Studies, *Canadian Journal of Chemical Engineering*, V.76, February 1998, p.76-86.

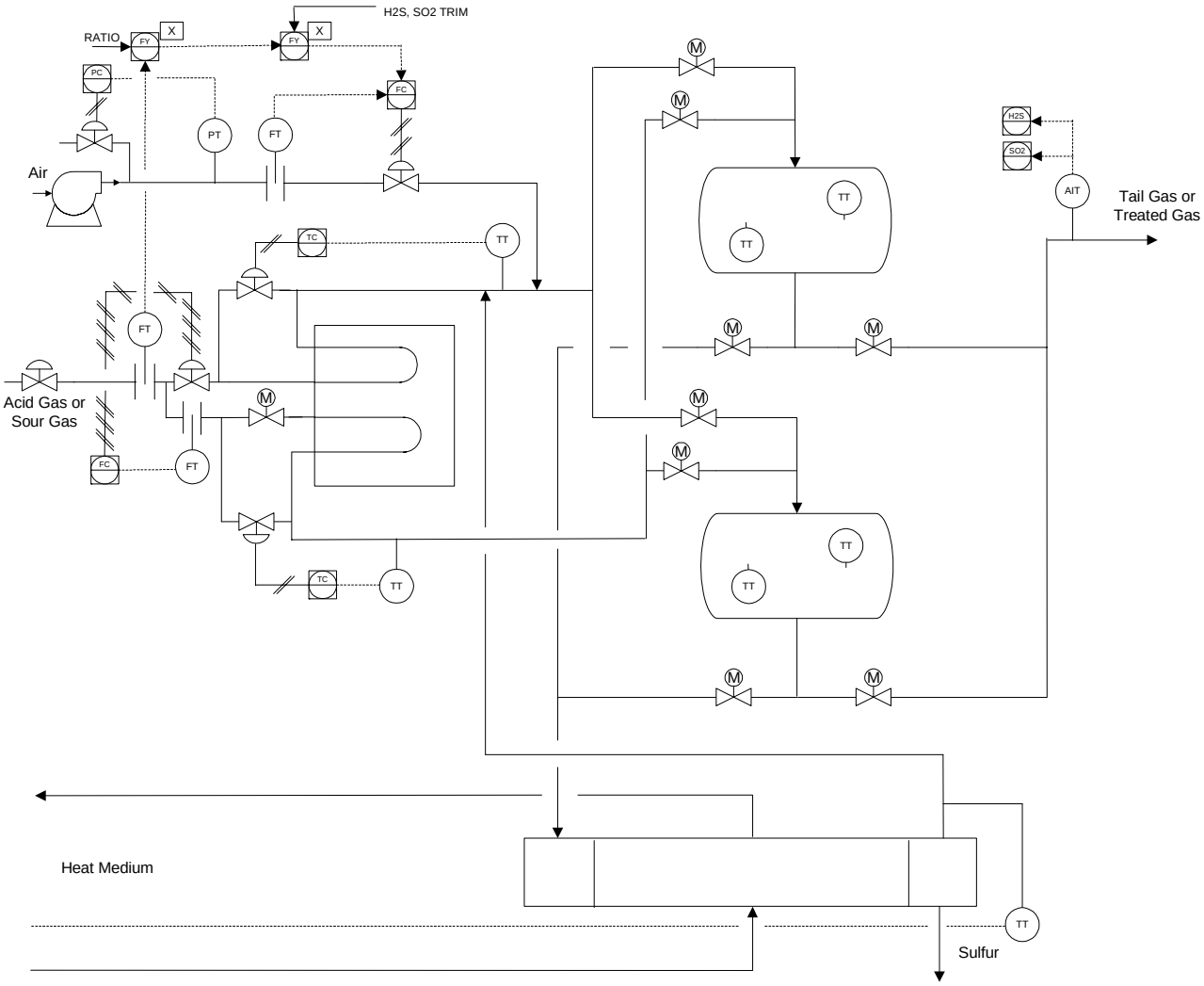

Figure 1: Process Schematic: Xergy Sub Dew Point Direct Oxidation Process

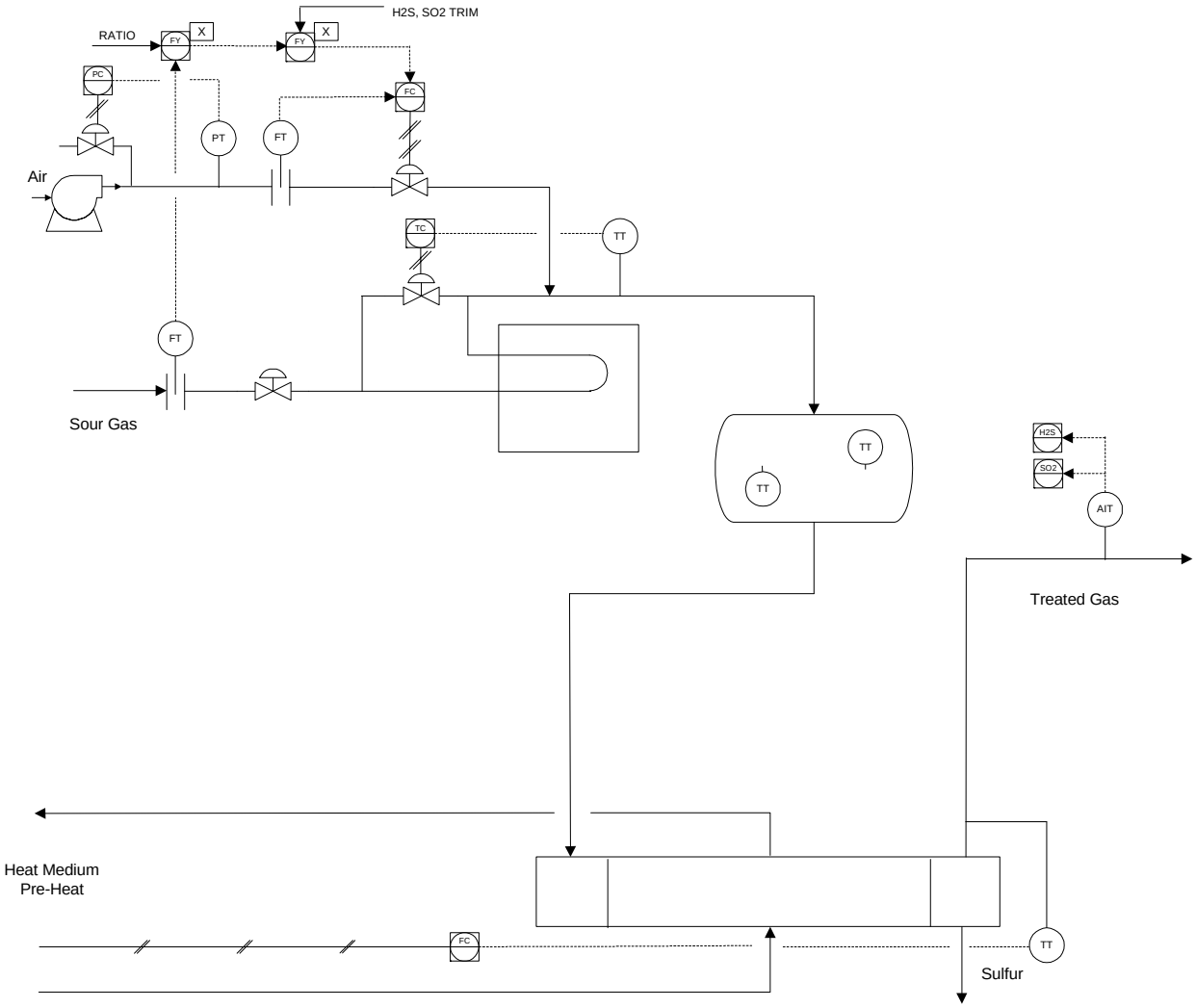

Figure 2: Process Schematic: Xergy Above Dew Point Direct Oxidation Process

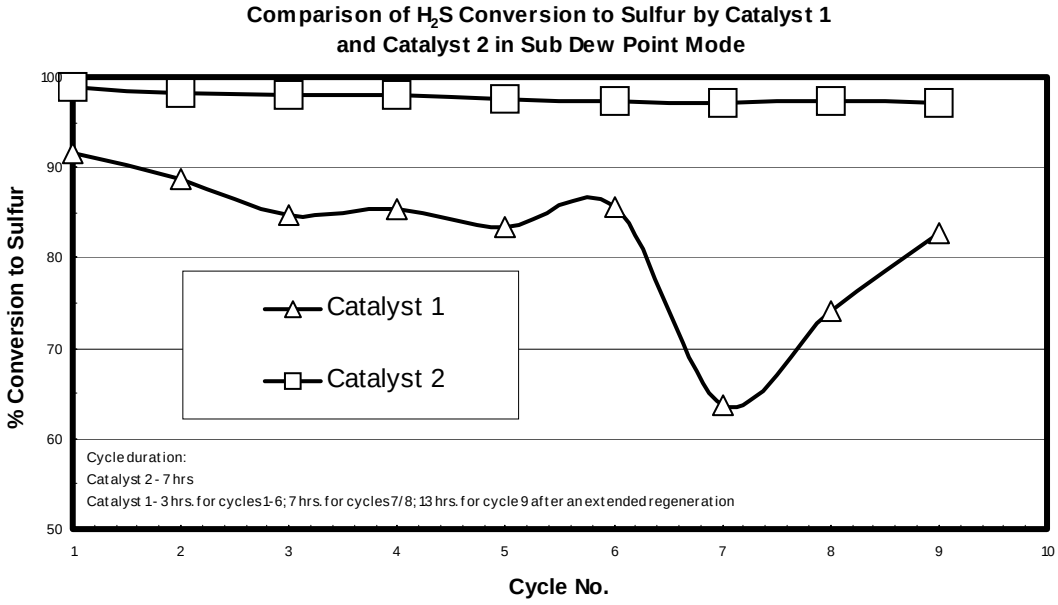

Figure 3: Comparison of Original and Second Generation Catalysts – Low Pressure