MANAGING DEBRIS IN GEOTHERMAL PRODUCTION FLUID[1]

Kevin Koorey[1], Alexandre Rivera Diaz, Julie Chiquet

[1] MB Century, 166 Karetoto Rd. Wairakei, Taupo, New Zealand,

kkoorey@mbcentury.com

ABSTRACT

Geothermal debris from flowing geothermal wells is a common occurrence in geothermal plants and needs to be managed to avoid damaging critical equipment such as heat exchangers, turbines, pumps, or reinjection systems. Slotted well liners, strainers and liquid/solid separators are examples of equipment used for this purpose. This paper reviews equipment designs developed in New Zealand to manage debris around steam fields between 1988 and 2020. Sources, types of debris and its impact on plant operations and maintenance are also described. A discussion around learnings based on field operations is presented, as well as suggestions for debris management equipment improvements.

Keywords: Strainers, filtering, debris, scale, solid removal, solid waste management, cleaning, maintenance, separators

1. INTRODUCTION

New Zealand geothermal fields are liquid dominated systems. Unlike dry steam fields where the resource is relatively clean and dry (Morris & Stephens, 1981), liquid dominated fields generate a significant amount of liquid and often solid debris in the form of gravel and sand.

The liquid phase is normally managed after the energy has been extracted from the geothermal fluid by either surface disposal or reinjection back to the reservoir. On the other hand, solid waste is often required to be managed prior and/or after the geothermal fluid passes through steam water separators or heat exchangers; depending on its concentration, source and size, the plant might require special equipment to filter the geothermal debris.

The plant designer could specify equipment to minimize the impact of geothermal debris to the plant. Small amounts of solids can pass through the plant with no consequence, but when solids build up and are left unattended, they can cause blockages in equipment which not only increases the maintenance required on the plant but also reduces the plant performance and power output.

Debris management becomes an integral part of a geothermal power plant to ensure continuous operation of the site without unplanned, costly, and/or lengthy outages.

2. GEOTHERMAL SOLIDS

2.1 Source

Identifying the origin of the geothermal debris is the first step in establishing measures to control solids in the power plant.

The source and amount of solid debris in geothermal fluid varies and depends on multiple factors, with reservoir geology and fluid chemistry being the most common.

2.1.1 Reservoir Geology

Geothermal production wells target feed zones with porous and fractured formation that allows the fluid to flow. At any given time, gravel, sand, and rocks can break away from the formation, travel with the fluid to the surface and eventually make their way through the geothermal plant. The type and quantity of debris vary from one production well to the other and

[1] This paper was first published & presented during New Zealand Geothermal Workshop, 2000

depend on the reservoir geology. Furthermore, certain conditions can increase the discharge of reservoir solids to the plant, such as heating cycles and formation flashing.

Heating cycles from quenching or power plant shuts are known to produce large quantities of well debris in the initial weeks after re-starting the plant. This is because the formation rock shrinks and expands as the temperature changes, fracturing the formation even further.

Formation flashing due to reservoir pressure drop is another event that increases the amount of debris produced by a well. The reservoir liquid flashing into steam creates high steam velocities flowing through the formation, breaking, and dislodging rocks into the well and steam field equipment.



Figure 1: Debris from geothermal well in a blocked strainer

2.1.2 Fluid Chemistry

Geothermal solids can precipitate from dissolved elements in the geothermal fluid as the fluid conditions change in the process. Changes in pressure and temperature along the process can cause the fluid to flash and/or cool, thus potentially creating precipitation of scale in wells, piping, and equipment such as magnesium silicate, calcite or stibnite. Where scales are formed, they can dislodge and pass into the plant as debris.



Figure 2: Scale deposition in pipe

2.1.3 Other sources

Other known sources of debris in the geothermal fluid are from steam field equipment itself. Corrosion and erosion of equipment due to chemistry, water flashing and high fluid velocities can contribute to the solid particles in the system.

Furthermore, well casing debris, drilling cuttings and piping rust from well and piping construction can be a contributing factor of solid waste accumulation.

2.2 Type of Solids

Types of solids identified by experience are (but not limited to):

- Gravel
- Sand/pumice
- Formation minerals
- Chemical scale
- Well casing debris
- Piping rust and erosion debris

3. IMPACT OF GEOTHERMAL SOLIDS IN THE POWER PLANT

Depending on the source of the geothermal debris, certain power plant equipment will experience exposure to solid waste. The quantity and size of solids will determine whether this exposure will have an insignificant or critical impact on the operation and maintenance of the plant.

3.1 Production Wells

Fractured and altered formation around the feed zone of a geothermal production well can collapse into the wellbore, blocking or increasing the well debris discharged to the plant.

Restarting quenched production wells can lead to a large discharge of well bore build up due to thermal cycling. This scenario can cause a total plant to shut down by blocking up essential equipment such as heat exchangers that can take weeks to clear.

Solids can also block the well liner perforation, which would require pulling/removing the liner for maintenance or injecting acid during a work over if scaling is the issue. These operations can be difficult and require time and resources to remedy.

3.2 Piping

Solids discharge will increase the rate of wear of piping, especially in locations with high fluid velocity. A good example of this is where an elbow was installed immediately above a production wellhead valve in the early days of Wairakei (see figure 3). Pipe erosion would occasionally result in replacing the fitting. Nowadays, the typical wellhead incorporates a tee with a blind flange on top.

High fluid velocity carrying well debris has also been identified in Separated Geothermal Water (SGW) discharge, silencer inlet piping and cyclone separator inlet piping. The increased rate of wear shortens the life of these components resulting in increased maintenance costs.

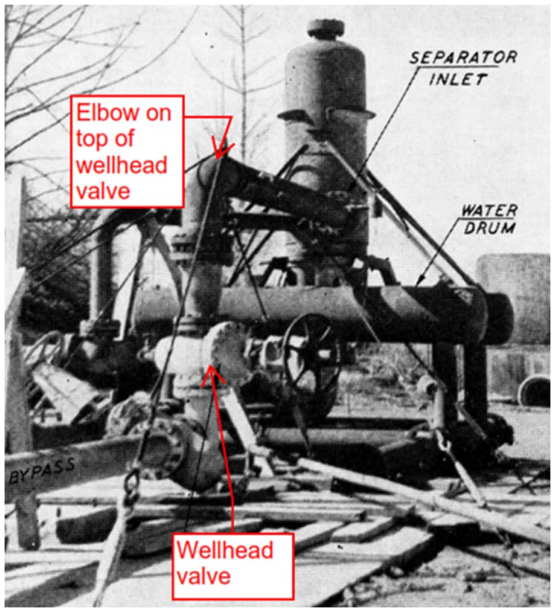

Figure 3: Early setup of wellhead and elbow (Bangma, 1960)

3.3 Heat exchangers

The tube side of the heat exchangers have a common problem when dealing with solid waste: the reduced diameter of the tubes is susceptible to accumulation of gravel or sand, blocking the tubes thus reducing heat exchanged and power production. Blanketing of the tube plate can also occur, where one large piece of debris may effectively block multiple tubes.

The tube side of the heat exchanger also experience a considerable pressure drop in the fluid. The process design would account for this pressure drop, however, when blocked tubes with gravel are not allowing fluid to pass, the pressure drop across the tubes increases, leading to flashing of SGW and deposition of scale into the tubes. Water blasting of the tubes during plant outages and/or online chemical cleaning are required to unblock the vessel's tubes. Online chemical cleaning typically will not be effective on a completely blocked tube, as flow is

required, but it has been effective on partially blocked tubes.

3.4 Reinjection Wells

Reinjection wells and reinjection lines can have a problem with scale build up as the reinjected water cools down. The scale can dislodge from the pipe and combined with the accumulation of debris from the production wells can reduce the injection capacity of wells if the solids reach the injection zone.

3.5 Pumps

Booster and feed pumps for SGW are exposed to high flow velocities. Impeller, pump body and pump seals can experience damage due to well debris or scale/rust dislodged from piping.

Servicing reinjection pumps impacts the injection capacity of a power plant, causing a complete or partial disruption of power generation.

3.6 Control Valves

Debris can get stuck around the valves or wear the valve seat, resulting in leakages and increased maintenance.

4. SOLID MANAGEMENT EQUIPMENT

4.1 Locations for Solid Management Equipment

Capturing solid waste before it reaches critical equipment is crucial to maintain plant efficiency whilst minimizing plant downtime. Plant features are put in place to mitigate the impact of the debris on the plant.

4.1.1 Production Wells

Most geothermal wells have a perforated liner below the production casing to prevent collapsing of the well. The liner is a regular well casing with either slotted or drilled holes of approximately 15 to 20mm with a surface area over one-meter equivalent to the cross section of the liner. While the main purpose of the liner is the well integrity, it also prevents bigger size debris in the formation to be carried up the well by the fluid.



Figure 4: Well liner installed at the feed zone

A production well can be flowed at a maximum output to dislodge the maximum amount of debris in a short period with the intention that there will be less debris left to flow to the station afterwards. The station is shut down while this operation is carried out. This requires suitable equipment (e.g. silencer and discharge containment), discharge consents and brine disposal strategy. Some wellheads are connected to a start-up silencer that allow the wells to discharge to a pond before feeding the plant.



Figure 5: Vertical discharge of well with sand/slit/gravel (left) and without (right)

4.1.2 Two phase Separators

Some separators are fitted with sand traps at the bottom and act as cyclone filters to separate the debris from the SWG. The heavy particles fall at the bottom and can be discharged online via a drain valve (See Figure 13).

4.1.3 Steam lines

Steam lines normally incorporate steam condensate pots to collect brine carry-over and condensed fluid prior to reaching the turbine or heat exchangers. It has been reported that occasionally scale collects in the pots.

Fine screens are sometimes located upstream of steam turbines but may cause more damage than they prevent when they fail and send pieces of the screen into the turbine.

4.1.4 SGW lines

Strainers are installed upstream of equipment such as heat exchangers to minimize the debris build up in the heat exchanger tubes.

4.1.5 Reinjection lines

Strainers are generally installed just upstream of reinjection pumps to protect the pump from any particles carried over through separators or heat exchangers. This scenario is common after servicing the heat exchanger, as solid particles from the maintenance work can remain in the system.

Some plants have installed strainers upstream of the reinjection wells as scale can dislodge from reinjection lines and enter the reinjection wells.

4.2 Types of Solid Management Equipment

4.2.1 Silencer and Weir Box

Prior to SGW being utilized in processes downstream of the 2-phase separator, or being reinjected into wells, there was no method of solid management. Historically the SGW was discharged to an atmospheric silencer featuring a weir box at the outlet of the silencer. The debris would be cleaned out of the weir box on a regular basis.

This method of solid management remains active; however, it is normally complemented with other solid management technology such as strainers.

4.2.2 Strainers

Body and Arrangement

For SGW going to a heat exchanger or pumps, generally, standard off the shelf T or Y strainers are used. If there are ongoing problems such as known high debris flow or if the strainer blocks up on a regular basis, then custom solutions are recommended.

Strainers can be classified into two main types according to their body configuration.

The Y strainer (see Figure 6) consists of a filter element in the body at a diagonal angle giving it its Y shape. The element is removed from the bottom. A blow down valve on the bottom would allow discharge of collected debris. When servicing there can be burn hazards from trapped hot water and blocked drains

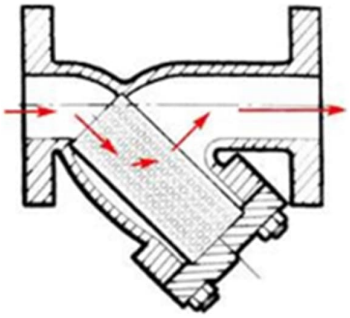

Figure 6: Y-type strainer

T strainers (see Figure 7) have the element basket in the vertical and it is removed from the top. Debris accumulates in the basket and can only be removed by taking the basket out. If the piping arrangement allows, back flowing the strainer can be possible to clear the debris from the basket. High back flows are required. The strainer is commonly fitted with a drain valve to empty the vessel when removing the basket for cleaning.

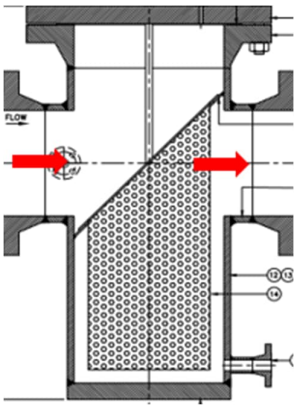

Figure 7: T type basket strainer

The T and Y type strainers shown in Figure 6 and Figure 7 will reduce the flow area as soon as the debris start to accumulate in the basket and increase the pressure drop across the strainer.

Basket strainers are commonly installed in a duplex style which consists of two basket strainers in parallel with isolation valves and a block and bleed system. When the duty strainer is blocked, the standby strainer can be brought into service while the duty strainer is isolated and cleaned thus allowing continuous plant operations.

The accumulation rate of debris can be estimated from the increase in the differential pressure across the strainers. The strainer is usually cleaned when the differential pressure reaches 0.2 bar to 0.6 bar. Power production can be affected when the strainer differential pressure becomes high. Furthermore, high pressure drop across a blocked strainer can cause the SGW to flash and deposit scale downstream, worsening the particulate accumulation. Baskets can fail under high differential pressure.

Basket

The basket itself can be made of perforated plate or wedge wire. The perforated plate is formed by punching holes in a flat sheet and then rolled. These are relatively coarse screens with a hole size ranging from 0.8 mm to 6 mm. Gravel can get wedged into the holes and require mechanical force to remove.

The wedge wire elements are designed to avoid gravel becoming wedged on the screen and easier to clear with back flow. Wedge wire has been used for geothermal strainers since the 1980's.

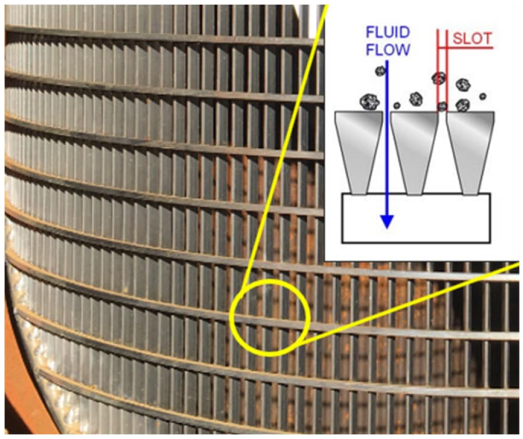

Figure 8: Wedge wire basket

Custom T strainer with wedge wire

A custom strainer design can be produced to improve capacity and reduce down-time. Figure 9 shows a custom-made strainer developed to minimize manual handling and provide easy access to clean debris from the bottom of the strainer. Unlike the traditional T strainer, which requires removing the top flange off the strainers to clean the baskets (high cost operation in time and labour), the basket in this example sits on the top half of the vessel. Captured debris from basket falls to the bottom of the strainer body. The solids can then be flushed to a silencer via a manual drain valve or automated blow down. The drain size is large enough to allow gravel and silt to flow through. If any obstruction occurs, there is capacity to unbolt the side flange at the strainer drain nozzle and scrape the bottom of the vessel.

The basket is made of wedge wire that allows captured debris to fall to the bottom of the strainer body by a small amount of back flow. In this way, debris accumulates in the bottom of the strainer and minimises the likelihood of an increasing pressure differential.

The height of the strainer body and element can be increased to allow for a finer element and/or lower pressure drop.

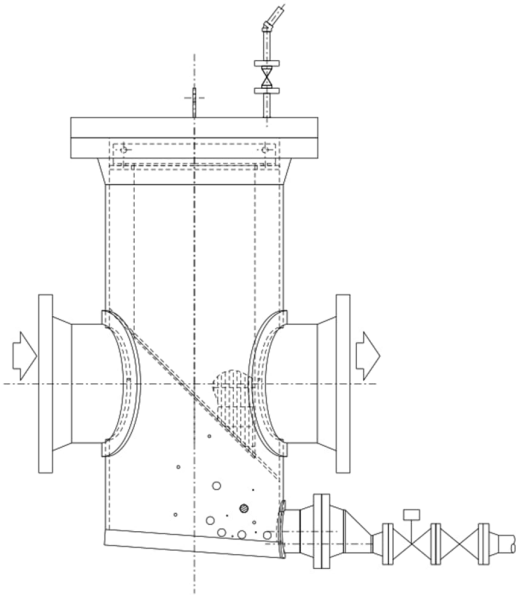

Figure 9: Customer Basket type strainer - Top basket and blowdown



Figure 10: Example of a custom basket type strainer DN900 body, DN600 inlet

4.2.4 Piping Dead Legs

Solids can accumulate quickly in piping dead legs (piping with low or no flow). Long piping dead legs are not ideal in a piping system because it increases risks of internal corrosion of the equipment. However, specially purposed dead legs can act as particle collectors when placed in the right location.

Dead legs are normally installed upstream of other solid management equipment to increase the efficiency of the latter (e.g. strainers). Dead legs can be fitted with a drain to flush out the debris to a silencer.

4.2.2 Settling Spool

A settling spool is a large diameter length of pipe installed downstream of a smaller pipe run. At the end of the spool, a top take-off pipe diverts the fluid while heavier particles settle in the spool as the fluid velocity decreases induced by the change from a small diameter pipe to a larger one.

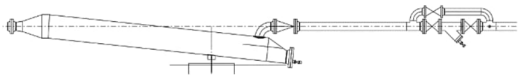

Figure 11: Settling spool

Field Experience

A settling spool was installed on a reinjection line around 2003 to catch silica scale. It consisted of a DN600 pipe installed downstream a DN200 reinjection pipe and upstream of a standard strainer. The fluid would come out of the top of the spool and the heavy particles could be drained via a DN50 valve. After a period of the settling spool operation, strainer blockages downstream of the spool were still an issue. The equipment was removed from service in 2004. It is suspected that the turbulence in the DN600 pipe was still too great and that the particles would get carried through to the downstream strainer.

Basket types strainers are still being used on the reinjection wellheads of this geothermal field.

4.2.5 Solid Cyclone Separators

The solid cyclone type filters use the same principle as steam-water separators: centrifugal force separates heavier particles from the fluid. The system incorporates a blow down drain at the bottom of the separator body. An example is shown in Figure 12 below.

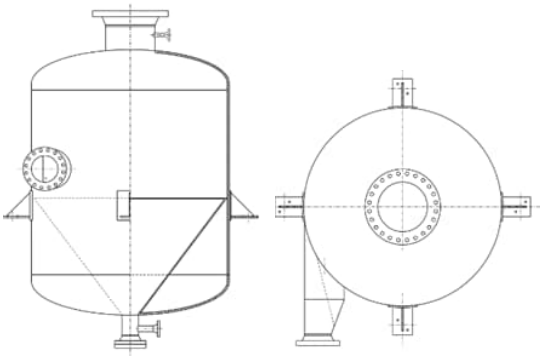

Figure 12: Cyclone type solids separator elevation and plan view

Field Experience

A cyclone type separator with automated blow down was installed upstream of a heat exchanger to manage small stones and fine silt that a standard basket strainer was unable to filter. The solid cyclone separator considerably decreased the blockages in the heat exchanger. A similar device has been used upstream of a reinjection well using a repurposed separator water vessel.

A common issue in both instances have been the recurrent blockage of the bottom blow down valve and pipe. Measures to avoid blockages were implemented without success, such as increasing the frequency of the blow down operation or changing blow down valve type. Annual clearing of the accumulated solid was adopted to maintain the equipment.

4.2.6 Two-phase Cyclone Separator

Some new two-phase cyclone separators include integrated gravel handling system at the bottom of the vessel with blow down valves (see Figure 13).

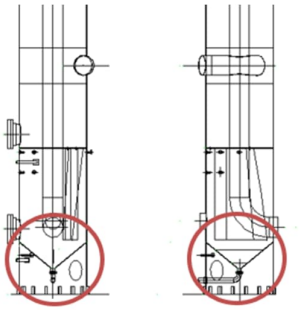

Figure 13: Separator with bottom sand trap

5. OVERVIEW

Based on the presented solid management review, Figure 14 shows multiple solid management equipment or features within a geothermal plant.

6. CONCLUSION

There is no one size fits all solution when it comes to managing geothermal debris. Each geothermal field comes with its own challenges. Unique solutions must be developed based on the type, size, and amount of geothermal debris encountered.

Poorly managed debris will lead to down time, reduced plant performance and equipment damage.

The standard T or Y type strainer is a simple and economic solution that can be easily sourced with supplier standard designs. If the debris rate is high or the debris size too small, then a custom solution can be designed.

The basket type strainer is effective for larger size solids. The wedge wire design minimizes the maintenance requirements over the perforated plate as it stops the solids from getting blocked in the mesh.

The top basket type strainer allows the operator to clean the strainer by doing a backflush and discharging the solids from the base of the strainer. The closed basket type requires more manual handling as the operator must take the basket out of the strainer to clean it.

The cyclonic method for solid removal is successful when dealing with fine gravel or sand, however, the handling of the collected solids from within the vessel requires a more reliable design while keeping maintenance time reasonably low.

The blow down valves for separators' sand traps and strainers should be sized to account for the specific debris being handled and avoid blockages. Flush tank valves could be used.

Solids collection in separators and accumulators is worth considering as part of geothermal debris management.

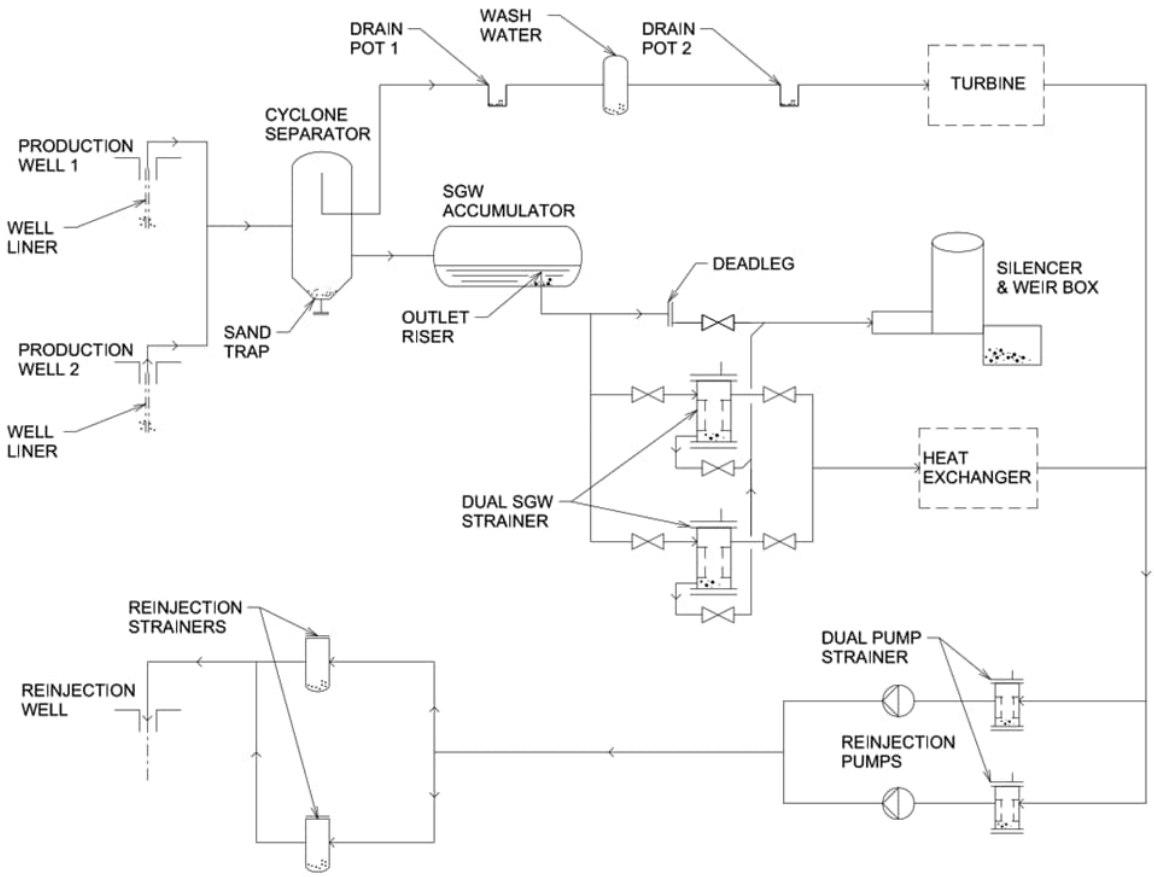

FIGURE 14 DIAGRAM SHOWING SOLID MANAGEMENT EQUIPMENT

ACKNOWLEDGEMENTS

We would like to thank our colleagues across the Geothermal Industry who helped us collect information to put this paper together.

We thank Mercury, notably Jeff Yee, for sharing their experience. We would also like to extend our gratitude to Ray Robinson and Fabian Hanik from Top Energy, and Tim Debenham, who also greatly contributed to this paper.

REFERENCES

Morris, W. F. and Stephens, F. B., *Characterization of Geothermal Solid Wastes*, Lawrence Livermore Laboratory. (1981).

Bangma, P.: The Development and Performance of the 30 Inch Diameter Bottom Outlet Cyclone Separator, Ministry of Works, Wairakei, New Zealand (1960).

Office of Energy Efficiency & Renewable Energy. Site accessed on 12th July, 2020.

https://www.energy.gov/eere/geothermal/geothermal-power-plants-minimizing-solid-waste-and-recovering-minerals